Block Diagram

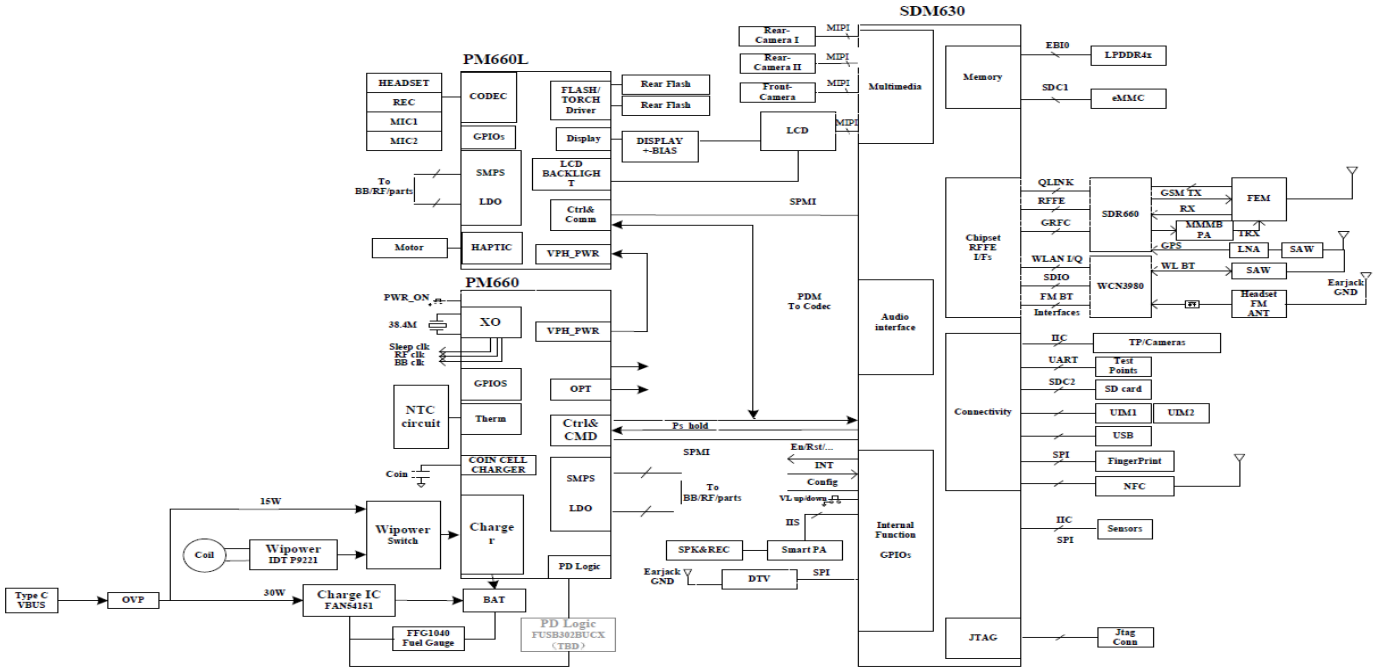

华勤通讯 Huaqin Telecom Technology Com.,Ltd		
Title	01.Block Diagram	
Size D	Project QL5018_MB_V1	Rev V1
Date: Thursday, April 05, 2018	Sheet 1 of 42	

I2C Configuration Table

I2C	Function	I2C Slave Address(7-bit mode)
BLSP2_I2C	eMCP DCDC-1	FAN53526 I2C Adress:0x60 (Write:0xC0 Read:0xC1)
	eMCP DCDC-2	PM3003A I2C Adress:0x60 (Write:0xC0 Read:0xC1)
	Smart PA	CS35L35 I2C Adress:0x40-ADR=0/0x41-ADR=1 (ADR=0 Write:0x80 Read:0x81)
	HPUE	TPS61280 I2C Adress:0x75 (Write:0xEA Read:0xEB)
	Sar Sensor	SX9310ICSTRT I2C Adress:0x28 (Write:0x60 Read:0x61)
BLSP4_I2C	TP	GT917D I2C Adress:0x5D (Write:0xBA Read:0xBB) FT5X46 I2C Adress:0x?? (Write:0x?? Read:0x??)
BLSP6_I2C	NFC	PN553 I2C Adress:0x28 (Write:0x50 Read:0x51)
CCI_I2C1	Dedicated Cam I2C1	TBD I2C Adress:0x?? (Write:0x?? Read:0x??)
CCI_I2C2	Dedicated Cam I2C2	TBD I2C Adress:0x?? (Write:0x?? Read:0x??)
LPI_I2C	ALS&PS	TMD27253 I2C Adress:0x39 (Write:0x72 Read:0x73)
	A+G	BMI160 SPI interface
	eCompass	AK09918C I2C Adress:0x0C (Write:0x18 Read:0x19)

Table of Content

Sheet	Content	Sheet	Content
01.	Block Diagram	24.	AUDIO_MIC_RCV_SPK
02.	I2C Configuration Table	25.	AUDIO_HEADSET
03.	Table of Content	26.	SENSORS_MOTOR
04.	GPIO MAP	27.	LCD_TP
05.	SDM630 Control/UFS/SDC1/SDC2	28.	REAR_CAM/FLASH
06.	SDM630 LPDDR4	29.	FRONT_CAM/CAM_POWER
07.	SDM630 CSI/DSI	30.	SIM_SD_KEY_LINK_BATT
08.	SDM630 GPIO (Internal Codec)	31.	DTV
09.	SDM630 Power (Core)	32.	NFC
10.	SDM630 Power (Other, LP4X)	33:	PRIMARY_ANTENNA
11.	SDM630 Ground	34:	PA & PA THERMAL
12.	PM660 CLKs/Control_GND	35:	TRX_LB
13.	PM660 Buck Converter	36:	TRX_MHB
14.	PM660 LDO Circuits	37:	DIVERSITY_ANT
15.	PM660 Charger_FG	38:	DRX_MB_HB
16.	PM660L Control and Bob_Flash	39:	DRX_LB
17.	PM660L Buck and LDO	40:	SDR660_MSS
18.	PM660L CODEC	41:	SDR660_PWR
19	PM660L Display	42:	SDR660_DA/PRX/DRX/FBRX
20.	eMCP	43:	QFE4101
21.	30W CHARGE	44:	WIFI_2.4G_5G & BT
22.	Wipower	45:	GPS
23.	Test Points	46:	WCN3980

华勤通讯 Huaqin Telecom Technology Com.,Ltd			
Title	03.Table of Content		
Size D	Project	QL5018_MB_V1	Rev V1
Date: Thursday, April 05, 2018		Sheet 3 of 42	

GPIO MAP

SDM630 GPIO Configuration

GPIO_0	BLSP_SPI_MOSI_1	GPIO_42	NC	GPIO_84	UIM2_CLK
GPIO_1	BLSP_SPI_MISO_1	GPIO_43	NC	GPIO_85	UIM2_RESET
GPIO_2	BLSP_SPI_CS1_N_1	GPIO_44	NC	GPIO_86	**UIM2_PRESENT**
GPIO_3	BLSP_SPI_CLK_1	GPIO_45	NC	GPIO_87	**UIM1_DATA**
GPIO_4	BLSP_UART_TX_2	GPIO_46	CAM0_RST_N	GPIO_88	UIM1_CLK
GPIO_5	BLSP_UART_RX_2	GPIO_47	CAM1_RST_N	GPIO_89	UIM1_RESET
GPIO_6	BLSP_I2C_SDA_2	GPIO_48	CAM2_RST_N	GPIO_90	UIM1_PRESENT
GPIO_7	BLSP_I2C_SCL_2	GPIO_49	NC	GPIO_91	UIM_BATT_ALARM
GPIO_8	BLSP_SPI_MOSI_3	GPIO_50	CAM_AF_VDD_EN	GPIO_92	**NC**
GPIO_9	BLSP_SPI_MISO_3	GPIO_51	CAM_AVDD_EN	GPIO_93	**NC**
GPIO_10	BLSP_SPI_CS_N_3	GPIO_52	NC	GPIO_94	**NC**
GPIO_11	BLSP_SPI_CLK_3	GPIO_53	LCD0_RESET_N	GPIO_95	**NC**
GPIO_12	NC	GPIO_54	SD_CARD_DET_N	GPIO_96	**WDOG_DISABLE**
GPIO_13	KEYPAD_LED_PWM	GPIO_55	DP_EN_N	GPIO_97	**NC**
GPIO_14	BLSP_I2C_SDA_4	GPIO_56	USBC_ORIENTATION	GPIO_98	**NC**
GPIO_15	BLSP_I2C_SCL_4	GPIO_57	FORCED_USB_BOOT	GPIO_99	**QLINK_REQUEST**
GPIO_16	BLSP_UART_TX_5	GPIO_58	USB_PHY_PS	GPIO_100	**QLINK_ENABLE**
GPIO_17	BLSP_UART_RX_5	GPIO_59	MDP_VSYNC_P	GPIO_101	**RFFE1_DATA - SDR660 debug**
GPIO_18	BLSP_UART_CTS_N_5	GPIO_60	NC	GPIO_102	**RFFE1_CLK - SDR660 debug**
GPIO_19	BLSP_UART_RFR_N_5	GPIO_61	NC	GPIO_103	**RFFE2_DATA - (41)QAT3533**
GPIO_20	FP_SUB_RESET	GPIO_62	NC	GPIO_104	**RFFE2_CLK - (41)QAT3533**
GPIO_21	SMB_STAT	GPIO_63	NC	GPIO_105	**NC**
GPIO_22	BLSP_I2C_SDA_6	GPIO_64	NC	GPIO_106	**NC**
GPIO_23	BLSP_I2C_SCL_6	GPIO_65	NC	GPIO_107	**RFFE4_DATA-(45)QSW8574,(48)RF1656SR**
GPIO_24	CDC_SWR_CLK	GPIO_66	TS_RESET_N	GPIO_108	**RFFE4_CLK -(45)QSW8574,(48)RF1656SR**
GPIO_25	CDC_SWR_DATA	GPIO_67	TS_INT_N	GPIO_109	**RFFE5_DATA-(52)QAT3514, (52)QAT3550,(47) QAT3522**
GPIO_26	WSA_SPKR_SD_N_1	GPIO_68	ACC_GYRO_DATA_AVA_INT_N	GPIO_110	**RFFE5_CLK-(52)QAT3514, (52)QAT3550,(47)QAT3522**
GPIO_27	NC	GPIO_69	ACC_GYRO_MOT_INT_N	GPIO_111	**RFFE6_DATA - (46)QET4101 ch0, (41)QPA4361**
GPIO_28	NFC_IRQ	GPIO_70	MAG_INT_N	GPIO_112	**RFFE6_CLK - (46)QET4101 ch0, (41)QPA4361**
GPIO_29	NFC_EN	GPIO_71	ALSP_INT_N	GPIO_113	**NC**
GPIO_30	NFC_DWL_REQ	GPIO_72	FP_INT_N_1	LPI_GPIO_0	LPI_SPI_1_CS1_N
GPIO_31	NFC_ESE_PWR_REQ	GPIO_73	NC	LPI_GPIO_1	LPI_PWR_EN
GPIO_32	CAM_MCLK0	GPIO_74	NC	LPI_GPIO_2	LPI_I2C_3_SDA
GPIO_33	CAM_MCLK1	GPIO_75	NC	LPI_GPIO_3	LPI_I2C_3_SCL
GPIO_34	CAM_MCLK2	GPIO_76	NC	LPI_GPIO_4	LPI_SPI_2_CS_N
GPIO_35	NC	GPIO_77	AUDIO_USBC_EN2_N	LPI_GPIO_5	LPI_SPI_2_CLK
GPIO_36	CCI_I2C_SDA0	GPIO_78	WMSS_RESETN	LPI_GPIO_6	LPI_SPI_2_MOSI
GPIO_37	CCI_I2C_SCL0	GPIO_79	**PWM_CNTRL**	LPI_GPIO_7	LPI_SPI_2_MISO
GPIO_38	CCI_I2C_SDA1	GPIO_80	**AUDIO_USBC_EN1**	LPI_GPIO_8	LPI_SPI_1_CS_N
GPIO_39	CCI_I2C_SCL1	GPIO_81	MSS_LTE_COXM_TXD	LPI_GPIO_9	LPI_SPI_1_CLK
GPIO_40	NC	GPIO_82	MSS_LTE_COXM_RXD	LPI_GPIO_10	LPI_SPI_1_MOSI
GPIO_41	FL_STROBE_TRIG	GPIO_83	UIM2_DATA	LPI_GPIO_11	LPI_SPI_1_MISO

LPI_GPIO_12	LPI_UART_1_TX
LPI_GPIO_13	LPI_UART_1_RX
LPI_GPIO_14	NC
LPI_GPIO_15	NC
LPI_GPIO_16	NC
LPI_GPIO_17	NC
LPI_GPIO_18	CDC_PDM_CLK
LPI_GPIO_19	CDC_PDM_SYNC
LPI_GPIO_20	CDC_PDM_TX
LPI_GPIO_21	CDC_PDM_RX0
LPI_GPIO_22	CDC_PDM_RX0_COMP
LPI_GPIO_23	CDC_PDM_RX1
LPI_GPIO_24	CDC_PDM_RX1_COMP
LPI_GPIO_25	CDC_PDM_RX2
LPI_GPIO_26	CDC_DMIC_CLK1
LPI_GPIO_27	CDC_DMIC_DATA1
LPI_GPIO_28	CDC_DMIC_CLK2
LPI_GPIO_29	CDC_DMIC_DATA2
LPI_GPIO_30	LPI_QCA_SB_CLK
LPI_GPIO_31	LPI_QCA_SB_DATA0

PM660 GPIO Configuration

GPIO_1	OPTION1	GPIO_8	SLB
GPIO_2	DIV_CLK2	GPIO_9	uUSB_TYPEC
GPIO_3	NC	GPIO_10	WCSS_VCTRL
GPIO_4	NFC_CLK_REQ	GPIO_11	HOMEKEY_FP_PM_INT
GPIO_5	WLAN_SW_CTRL	GPIO_12	WIPWR_MODE
GPIO_6	SLP_CLK	GPIO_13	PM_A_GPIO_13
GPIO_7	UIM_BATT_ALARM		

PM660A GPIO Configuration

GPIO_1	OPTION2	GPIO_8	SD_CARD_DET_N
GPIO_2	LPI_PWR_EN	GPIO_9	WCSS_VCTRL
GPIO_3	FRONT_CAM_DVDD_EN	GPIO_10	SLB
GPIO_4	REAR_CAM_DVDD_EN	GPIO_11	LP4x_CTRL
GPIO_5	NC	GPIO_12	LP4x_MODE
GPIO_6	FP_VDD_EN		
GPIO_7	KEY_VOL_UP_N		

华勤通讯 Huaqin Telecom Technology Com.,Ltd

Title	04.GPIO Map	
Size D	Project QL5018_MB_V1	Rev V1
Date: Thursday, April 05, 2018	Sheet 4 of 42	

SDM630 Control/UFS/SDC1/SDC2
REF 501-599

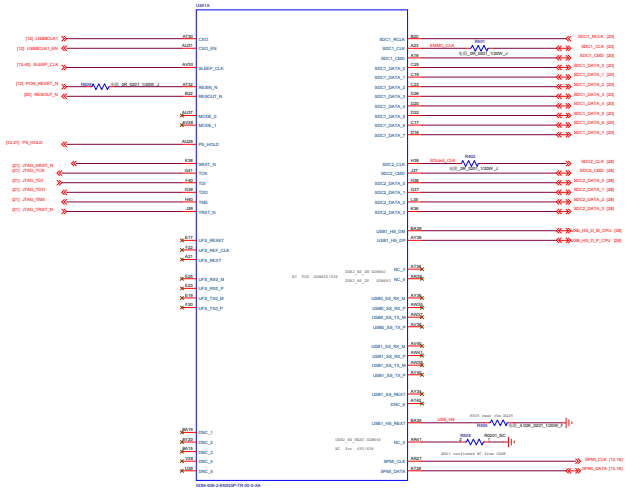

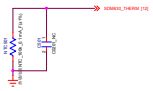

华勤通讯 Huaqin Telecom Technology Com.,Ltd			
Title	05.SDM630 Control/UFS/SDC1/SDC2		
Size D	Project QL5018_MB_V1		Rev V1
Date: Thursday, April 05, 2018		Sheet 5 of 42	

SDM630 LPDDR4
REF 601-699

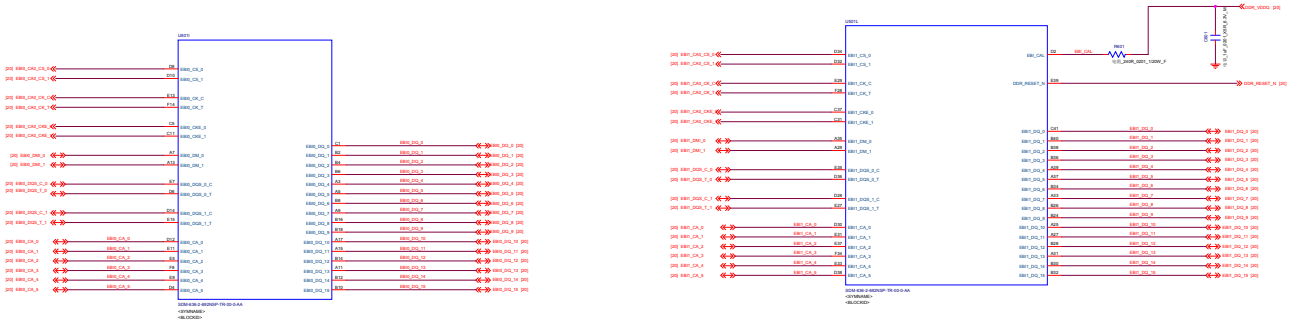

华勤通讯 Huaqin Telecom Technology Com.,Ltd			
Title	06.SDM630 LPDDR4X		
Size D	Project QL5018_MB_V1		Rev V1
Date: Thursday, April 05, 2018		Sheet 6 of 42	

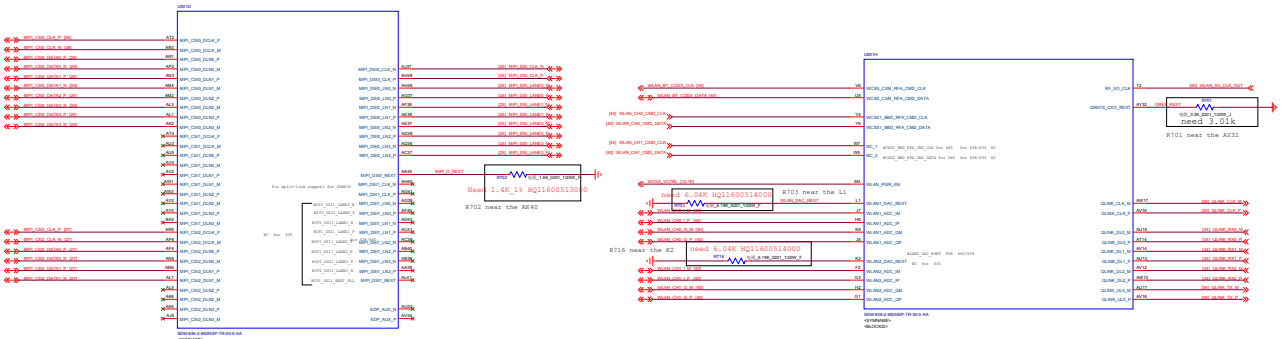

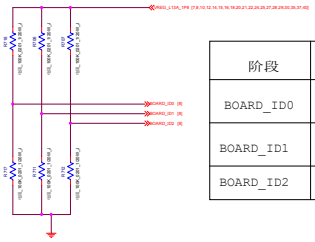

阶段	EVT0	EVT1	DVT1	DVT2	PVT	MP
BOARD_ID0	0	1	0	0	1	0
BOARD_ID1	0	0	1	0	0	1
BOARD_ID2	0	0	0	1	1	1

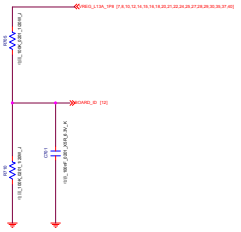

频段	国内版	一般国际版
ADC value	1.224V	0.576V
R705	47K	100K
R710	100K	47K

华勤通讯 Huaqin Telecom Technology Com.,Ltd		
Title	07.SDM630 CSI/DSI	
Size D	Project QL5018_MB_V1	Rev V1
Date: Thursday, April 05, 2018	Sheet 7 of 42	

SDM630 GPIO (Internal Codec)

REF 801-899

Note: Asterisks (*) indicate modem power management (MPM) wake-up pins

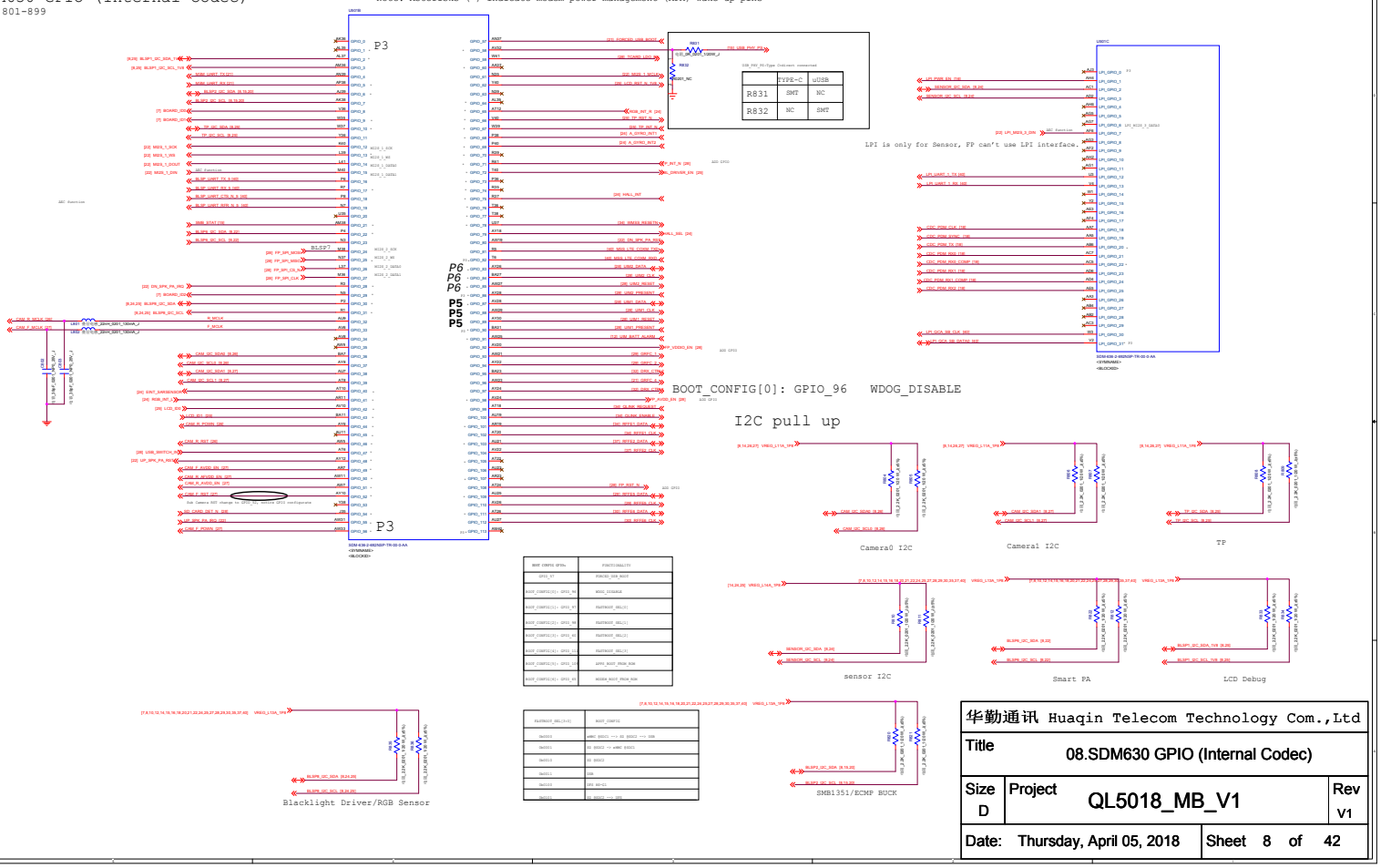

BOOT CONFIG GPIOs	FUNCTIONALITY
GPIO_97	FORCED USB BOOT
BOOT_CONFIG[1]: GPIO_96	WDOG_DISABLE
BOOT_CONFIG[2]: GPIO_97	FASTBOOT_ENA[1]
BOOT_CONFIG[2]: GPIO_40	FASTBOOT_ENA[2]
BOOT_CONFIG[3]: GPIO_40	FASTBOOT_ENA[3]
BOOT_CONFIG[3]: GPIO_116	FASTBOOT_ENA[4]
BOOT_CONFIG[4]: GPIO_116	APPS BOOT FROM ROM
BOOT_CONFIG[4]: GPIO_40	MODEM BOOT FROM ROM

FASTBOOT_ENA[1:4]	BOOT_CONFIG
0x0000	eMMC EMMC1 <-> SD EMMC2 <-> SDR
0x0001	SD EMMC2 <-> eMMC EMMC1
0x0010	SD EMMC2
0x0011	SDR
0x0100	SPI NOR
0x0101	SD EMMC2 <-> SDR

华勤通讯 Huaqin Telecom Technology Com.,Ltd		
Title	08.SDM630 GPIO (Internal Codec)	
Size D	Project QL5018_MB_V1	Rev V1
Date: Thursday, April 05, 2018	Sheet 8 of 42	

SDM630 Power (Other, LP4X)
REF 1001-1099

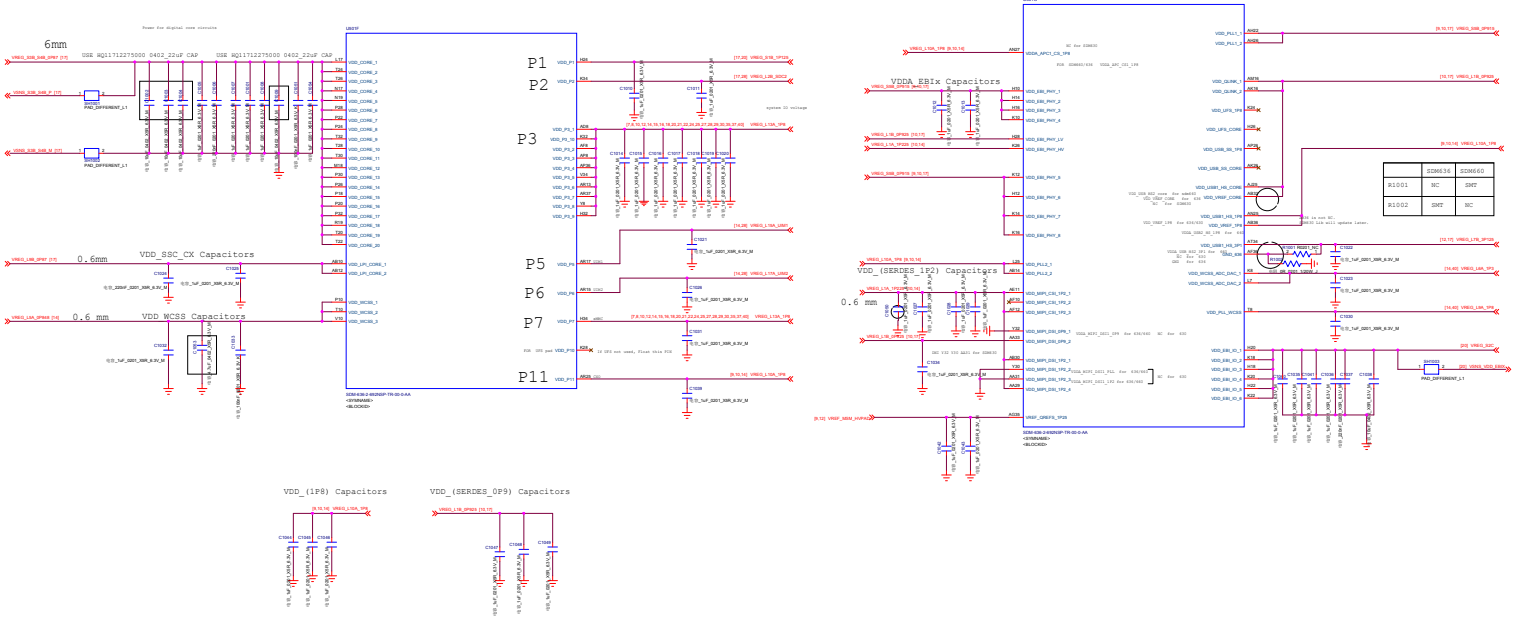

	SDM636	SDM660
R1001	NC	SMT
R1002	SMT	NC

华勤通讯 Huaqin Telecom Technology Com.,Ltd		
Title	10.SDM630 Power (Other, LP4X)	
Size D	Project QL5018_MB_V1	Rev V1
Date: Thursday, April 05, 2018	Sheet 10 of 42	

SDM630 Ground
REF 1101-1199

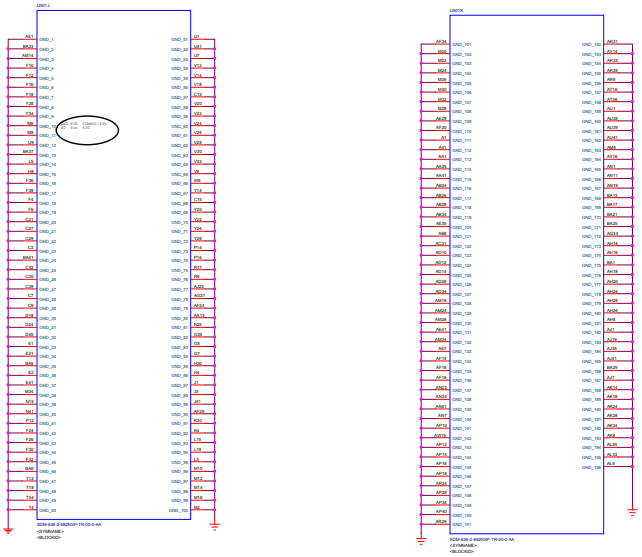

华勤通讯 Huaqin Telecom Technology Com.,Ltd		
Title	11.SDM630 Ground	
Size D	Project QL5018_MB_V1	Rev V1
Date: Thursday, April 05, 2018	Sheet 11 of 42	

PM660 CLKs/Control_GND

REF 1201-1299

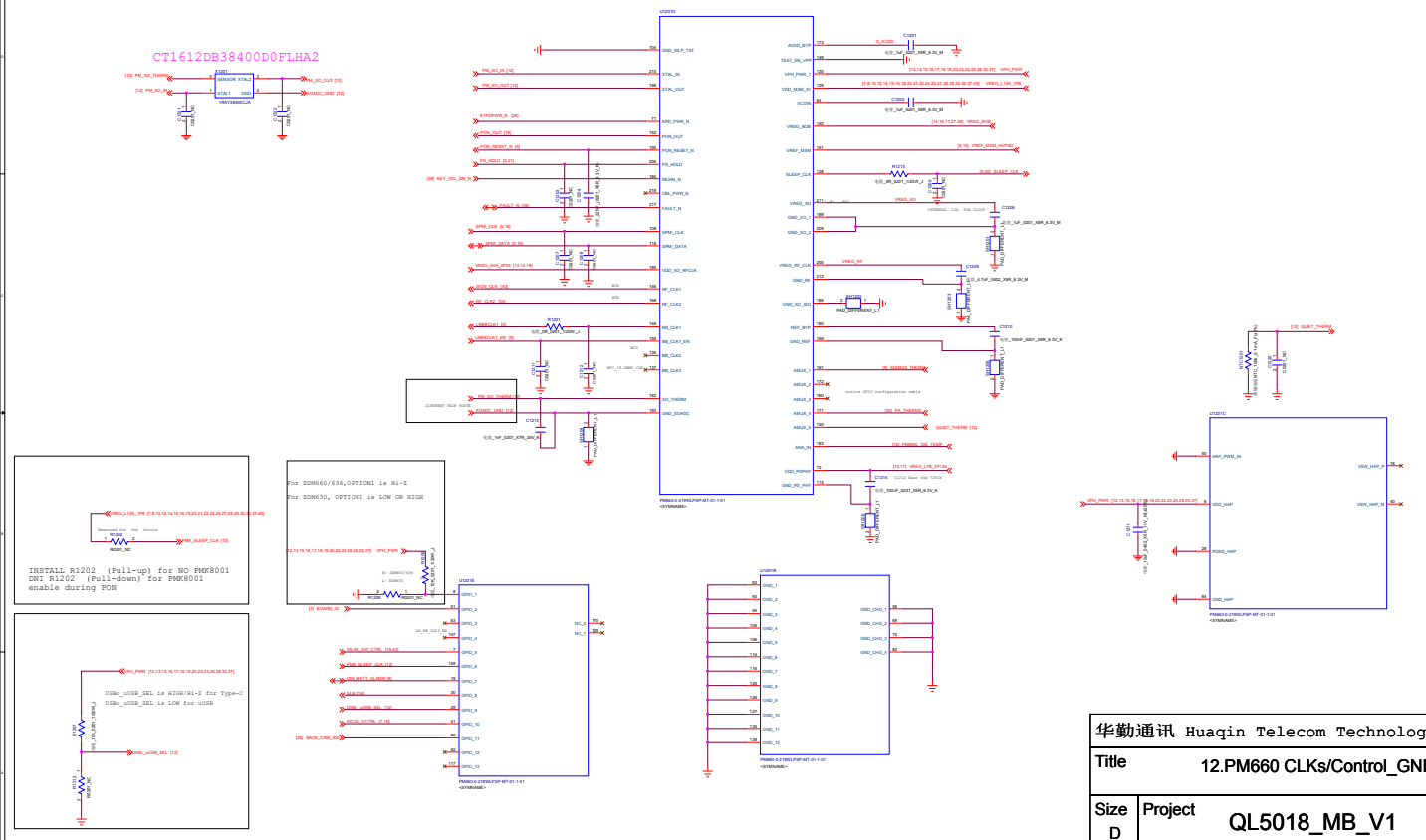

华勤通讯 Huaqin Telecom Technology Com.,Ltd

Title	12.PM660 CLKs/Control_GND	
Size D	Project QL5018_MB_V1	Rev V1
Date: Thursday, April 05, 2018	Sheet 12 of 42	

PM660 Buck Converter

REF 1301-1399

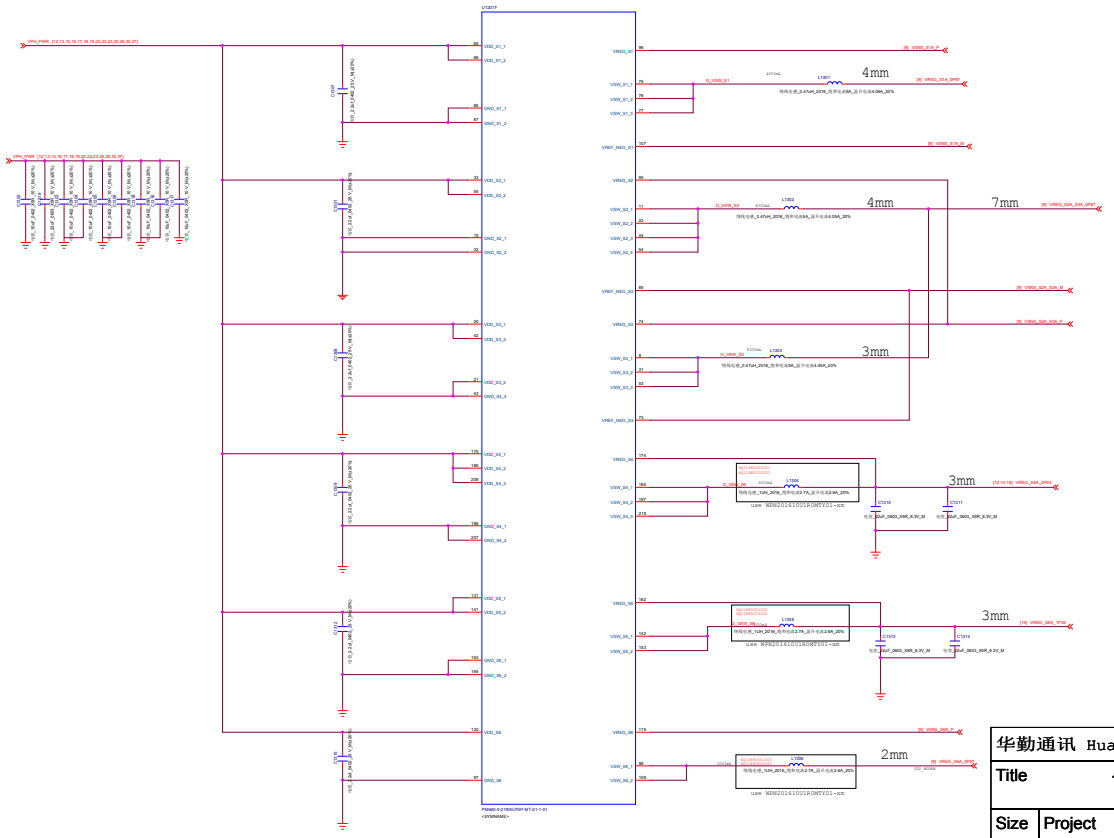

华勤通讯 Huaqin Telecom Technology Com.,Ltd		
Title	13.PM660 Buck Converter	
Size D	Project QL5018_MB_V1	Rev V1
Date: Thursday, April 05, 2018	Sheet 13 of 42	

PM660 LDO Circuits

REF 1401-1499

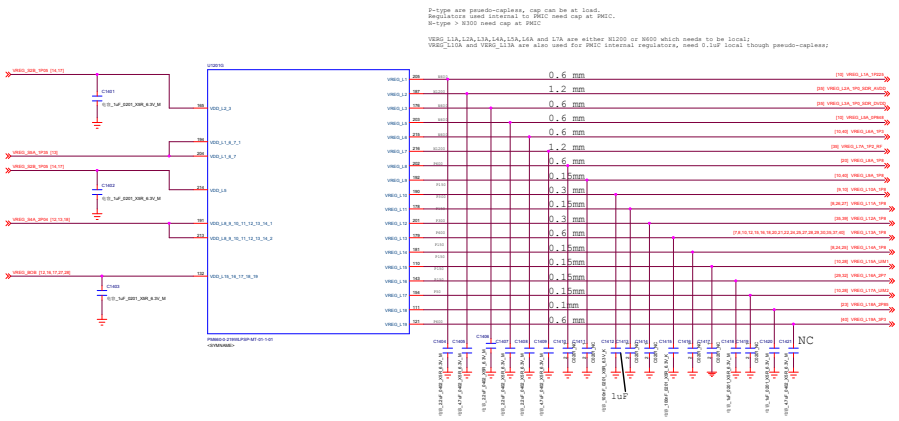

华勤通讯 Huaqin Telecom Technology Com.,Ltd			
Title	14.PM660 LDO Circuits		
Size D	Project	QL5018_MB_V1	Rev V1
Date: Thursday, April 05, 2018		Sheet 14 of 42	

PM660 Charger_FG
REF 1501-1599

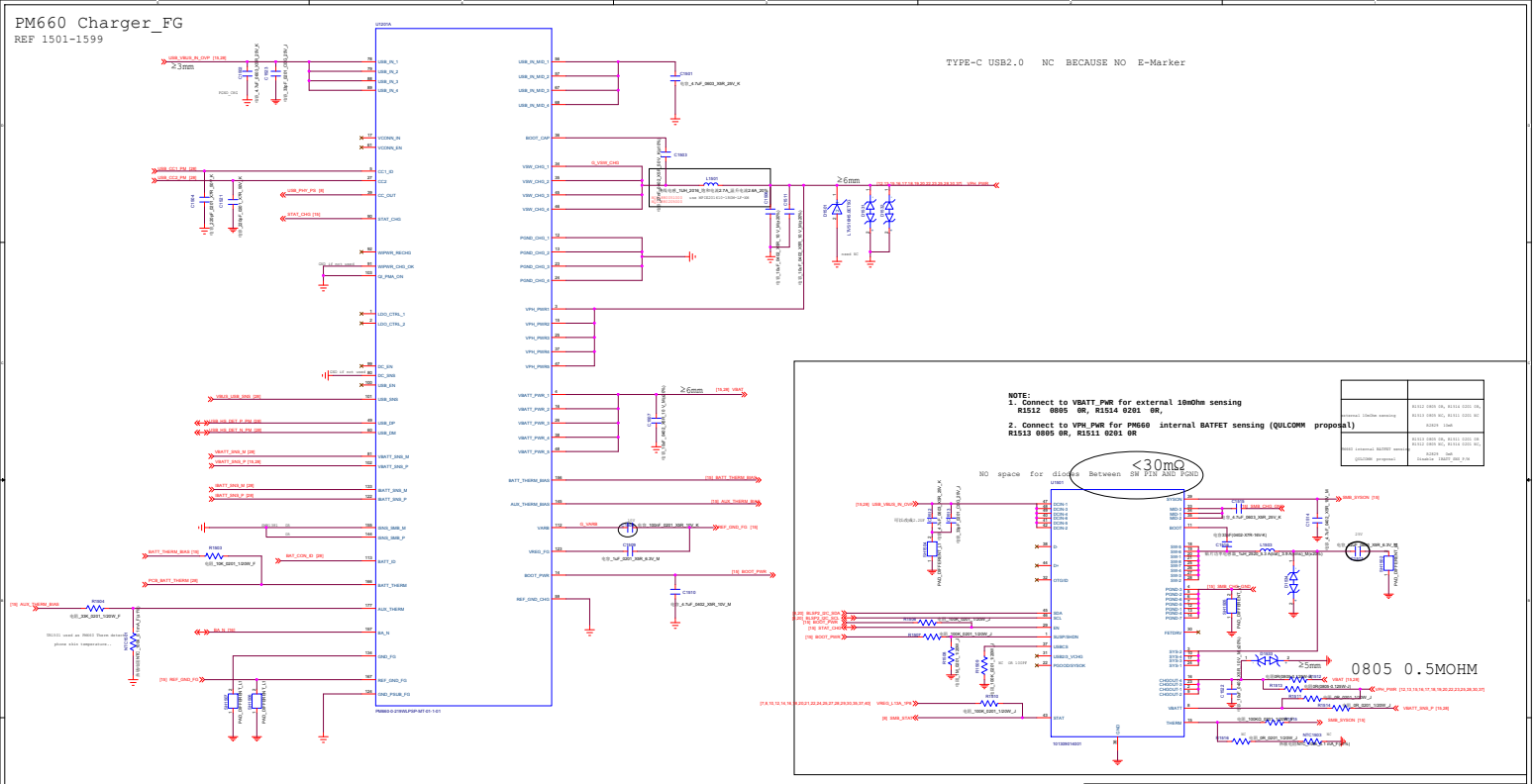

华勤通讯 Huaqin Telecom Technology Com.,Ltd	
Title 15.PM660 Charger_FG_Paralle_Chg	
Size D / Project QL5018_MB_V1	Rev V1
Date: Thursday, April 05, 2018	Sheet 15 of 42

PM660L Control and Bob_Flash

REF 1601-1699

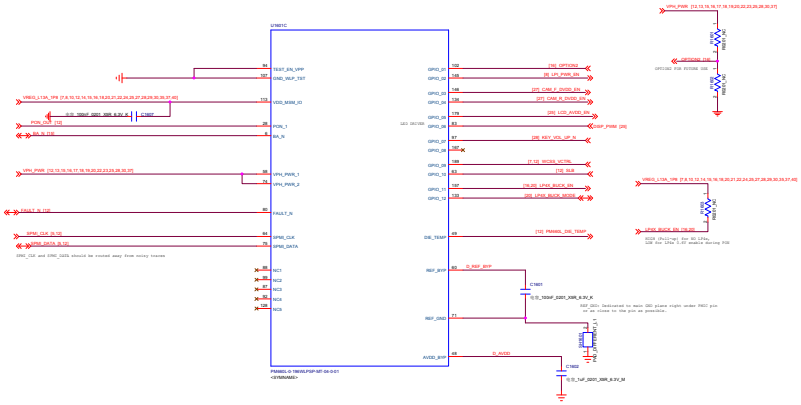

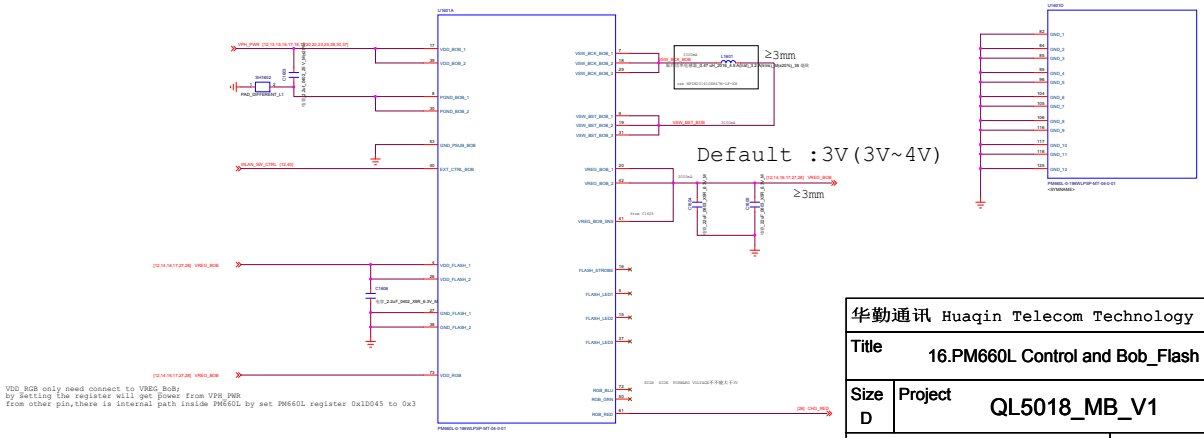

VDD_RGB only need connect to VREG_BoB;
by setting the register will get power from VPH_PWR
from other pin,there is internal path inside PM660L by set PM660L register 0x1D045 to 0x3

华勤通讯 Huaqin Telecom Technology Com.,Ltd		
Title	16.PM660L Control and Bob_Flash	
Size D	Project QL5018_MB_V1	Rev V1
Date: Thursday, April 05, 2018	Sheet 16 of 42	

PM660L Buck and LDO
REF 1701-1799

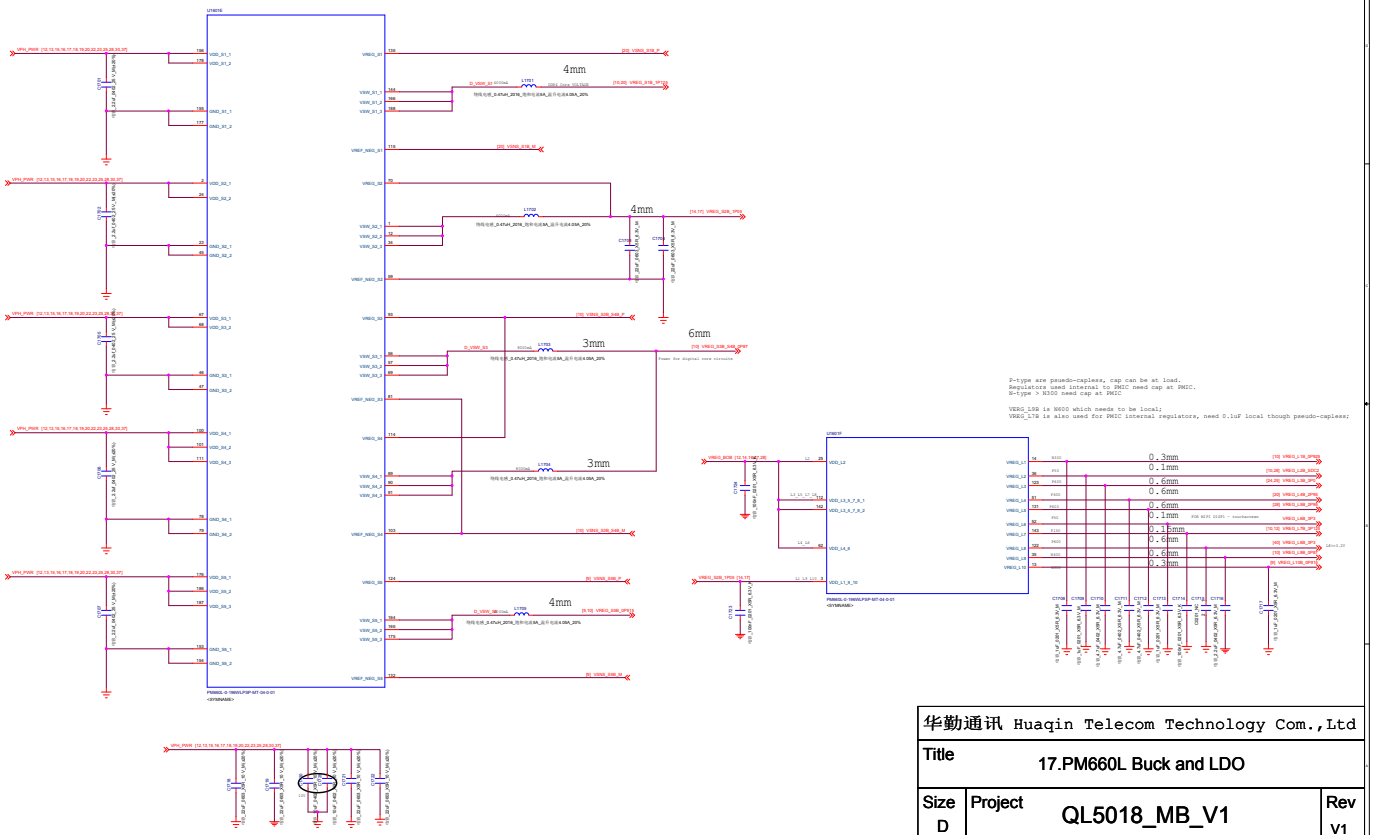

华勤通讯 Huaqin Telecom Technology Com.,Ltd		
Title	17.PM660L Buck and LDO	
Size D	Project QL5018_MB_V1	Rev V1
Date: Thursday, April 05, 2018	Sheet 17 of 42	

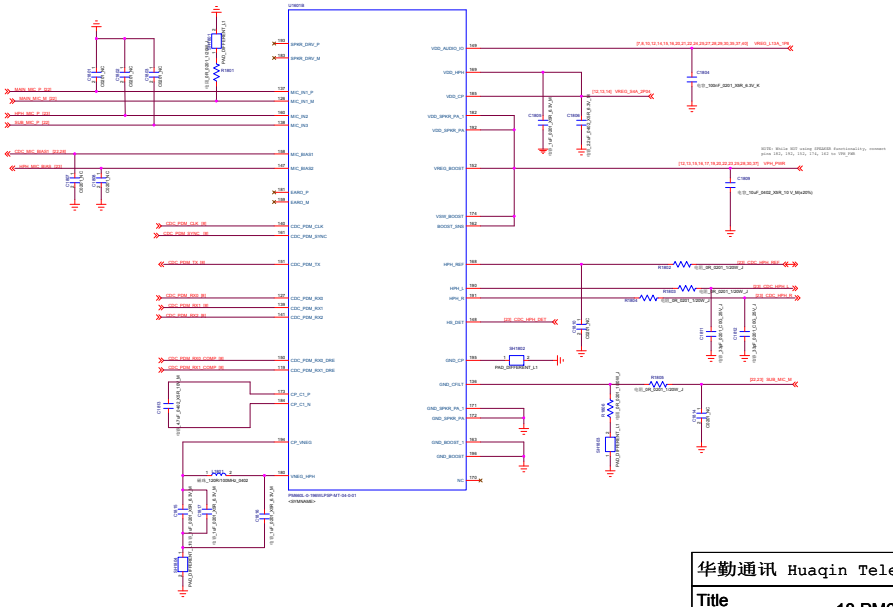

华勤通讯 Huaqin Telecom Technology Com.,Ltd		
Title	18.PM660L CODEC	
Size D	Project QL5018_MB_V1	Rev V1
Date: Thursday, April 05, 2018	Sheet 18 of 42	

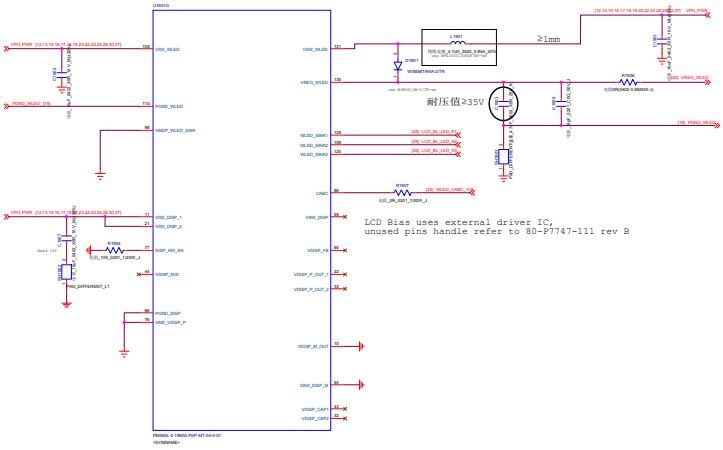

华勤通讯 Huaqin Telecom Technology Com.,Ltd		
Title	19.PM660L Display	
Size D	Project QL5018_MB_V1	Rev V1
Date: Thursday, April 05, 2018	Sheet 19 of 42	

eMCP
REF 2001-2099

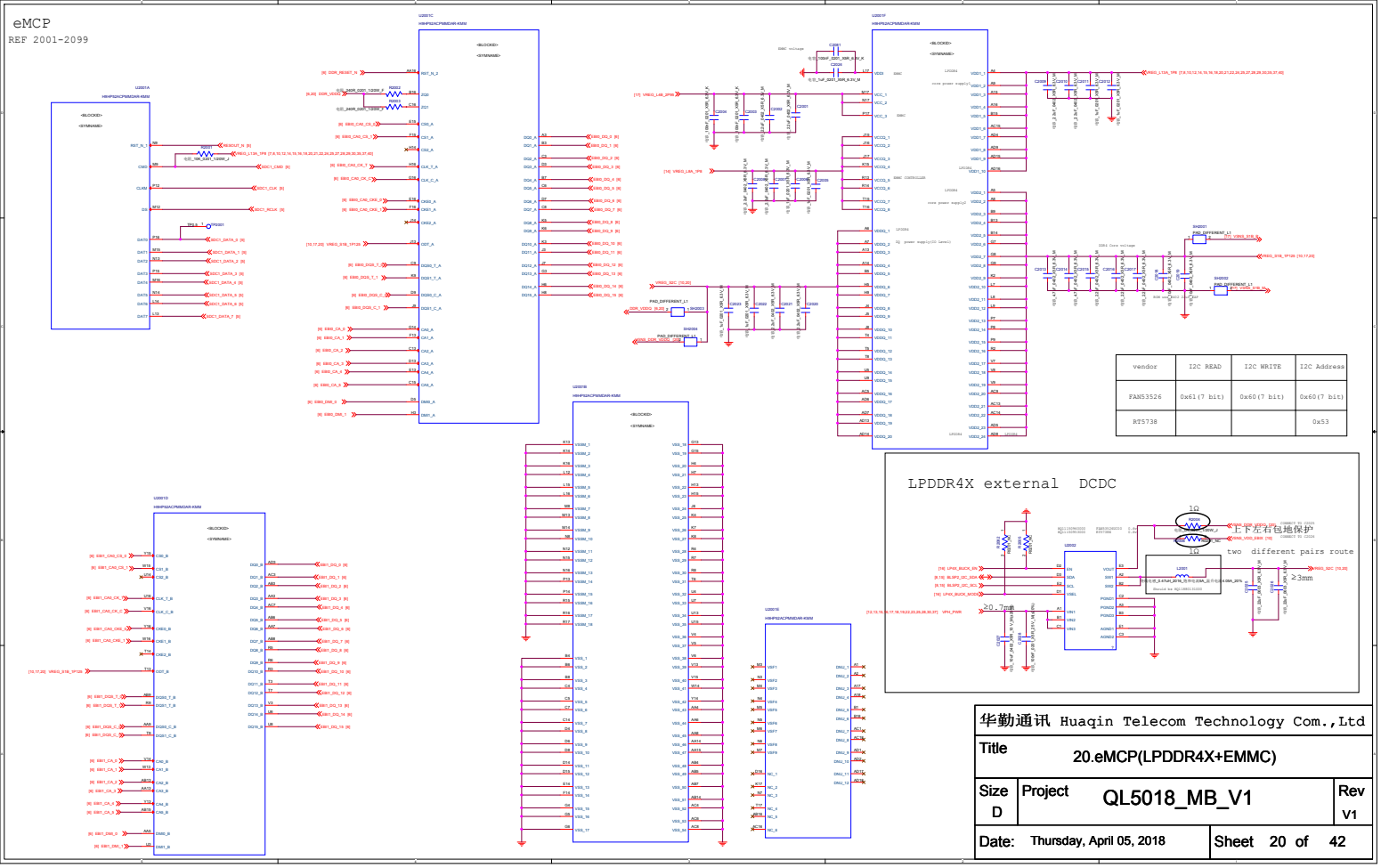

vendor	I2C READ	I2C WRITE	I2C Address
FAN53526	0x61(7 bit)	0x60(7 bit)	0x60(7 bit)
RT5738			0x53

LPDDR4X external DCDC

华勤通讯 Huaqin Telecom Technology Com.,Ltd

Title	20.eMCP(LPDDR4X+EMMC)	
Size D	Project QL5018_MB_V1	Rev V1
Date: Thursday, April 05, 2018	Sheet 20 of 42	

Test Points

REF 2301-2399

UART and Force USB boot

Groungding Springs

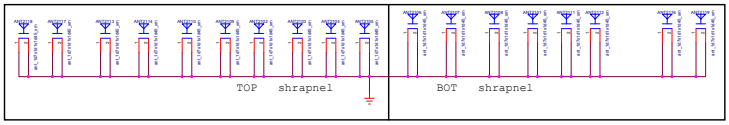

JTAG CONNECTOR

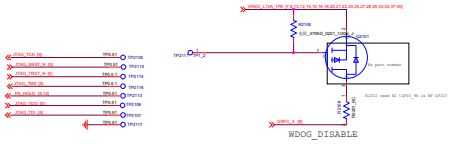

Optical points

Shielding

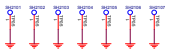

BAT Shielding

华勤通讯 Huaqin Telecom Technology Com.,Ltd		
Title	21.Test Points/Shielding	
Size D	Project QL5018_MB_V1	Rev V1
Date: Thursday, April 05, 2018	Sheet 21 of 42	

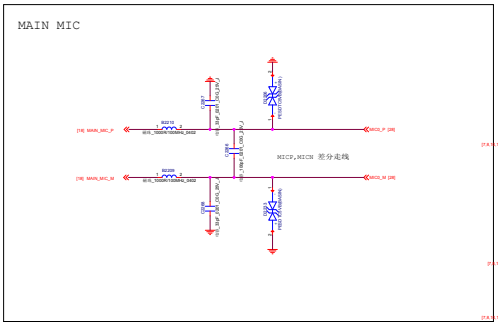

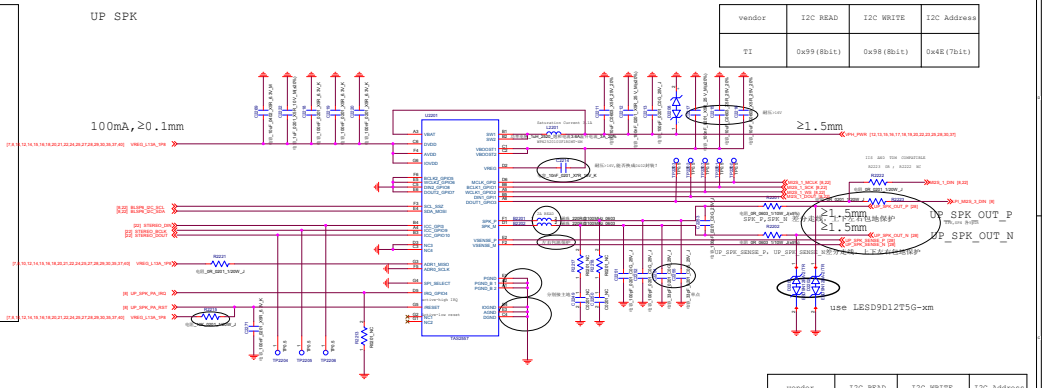

vendor	I2C READ	I2C WRITE	I2C Address
TI	0x99(8bit)	0x98(8bit)	0x4E(7bit)

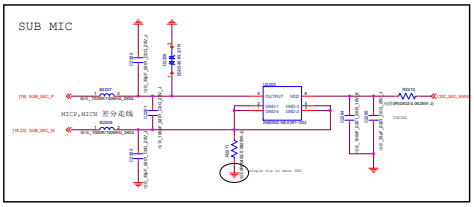

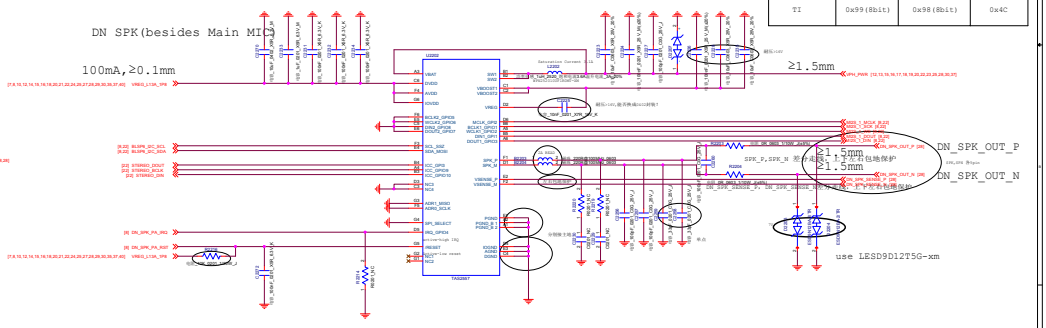

vendor	I2C READ	I2C WRITE	I2C Address
TI	0x99(8bit)	0x98(8bit)	0x4C

华勤通讯 Huaqin Telecom Technology Com.,Ltd			
Title	22.AUDIO_MIC_SPK		
Size D	Project QL5018_MB_V1		Rev V1
Date: Thursday, April 05, 2018		Sheet 22 of 42	

AUDIO_HEADSET

REF 2501-2599

Single via to main GND

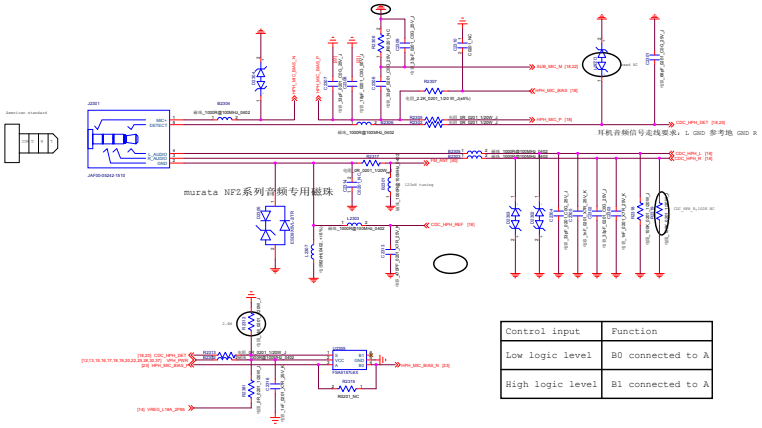

REF 2601-2699

E-COMPASS

vendor	I2C READ	I2C WRITE	I2C Address
AK09918C	0x19	0x18	0x0C

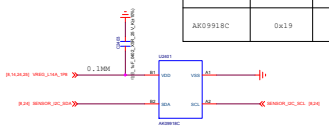

Gyro+G-sensor

vendor	I2C READ	I2C WRITE	I2C Address
BMI120	D1	D0	0x68(7bit)

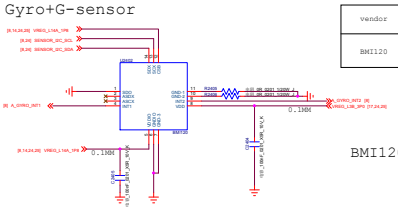

BMI120

ALS&PS

vendor	Slave Address	I2C READ	I2C WRITE
CM3232	0X10		

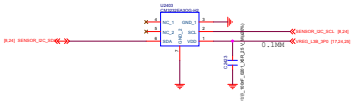

SAR_SENSOR

vendor	I2C Read	I2C Write	I2C Address
SX9325			0X28

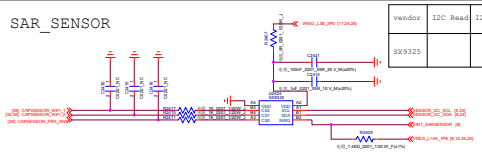

HALL

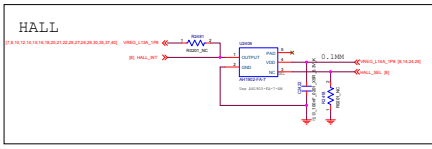

RGB_CON

vendor	I2C Read	I2C Write	I2C Address
SX9325			0X39

RGB sensor locates in RGBFPC

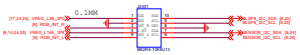

华勤通讯 Huaqin Telecom Technology Com.,Ltd		
Title	24.SENSORS	
Size D	Project QL5018_MB_V1	Rev V1
Date: Thursday, April 05, 2018	Sheet 24 of 42	

LCM

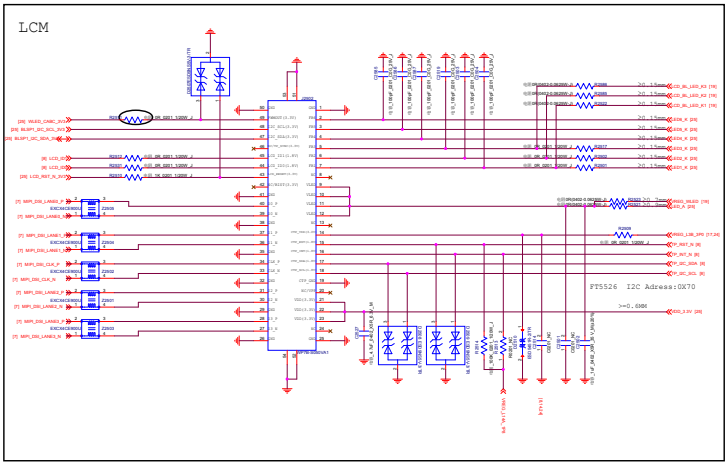

LCD PWR

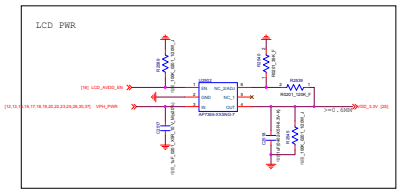

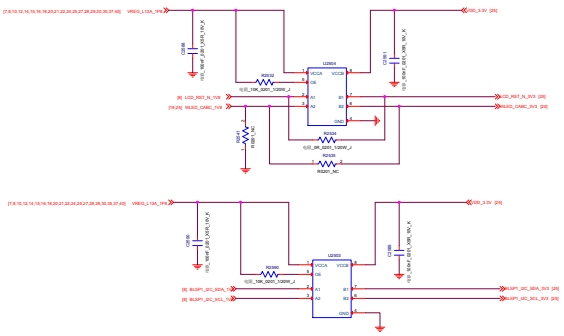

Backlight

vendor	I2C READ	I2C WRITE	I2C Address
TI(LP8556)	0x59(8bit)	0x58(8bit)	0x2C

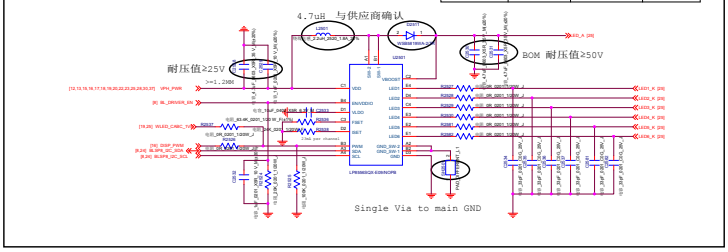

华勤通讯 Huaqin Telecom Technology Com.,Ltd		
Title	25.LCD	
Size D	Project QL5018_MB_V1	Rev V1
Date: Thursday, April 05, 2018	Sheet 25 of 42	

REAR_CAM/FLASH

REF 2801-2899

UP MAIN DOWN SLAVE

First Main RGB Camera

12 M CAMERA

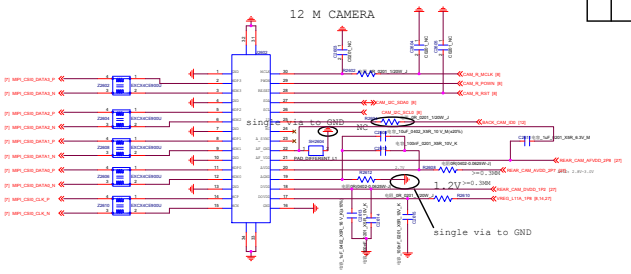

Vendor	I2C READ (sensor)	I2C WRITE(sensor)	CS	I2C READ(Driver)	I2C WRITE(Driver)	I2C READ(EEPROM)	I2C WRITE(EEPROM)
SONY	0A43 (H)	0A42 (H)		2A19 (H)	2A18 (H)	0A41 (H)	0A40 (H)

Charger indicator

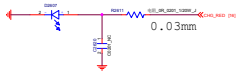

华勤通讯 Huaqin Telecom Technology Com.,Ltd		
Title	26.REAR_CAM/INDICATOR	
Size D	Project QL5018_MB_V1	Rev V1
Date: Thursday, April 05, 2018	Sheet 26 of 42	

FRONT_CAM/CAM_POWER
REF 2901-2999

Front Camera 5 MEGA

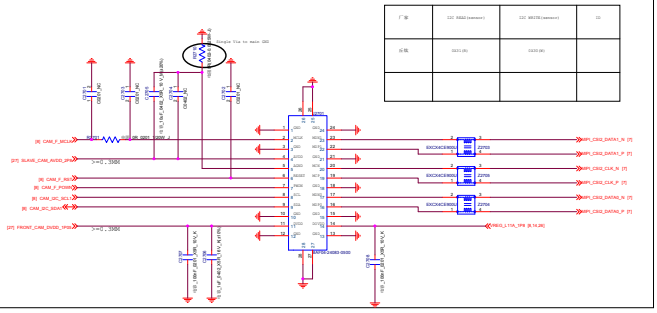

Should check LDO amounts based on released Spec

Rear DVDD LDO 1.2V <=300mA

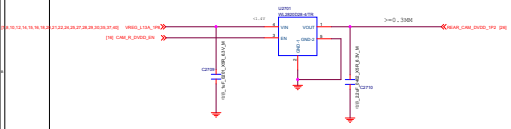

Rear cam AFVCC 2.8V 确认是否可以删除AF LDO?

need use WL2820

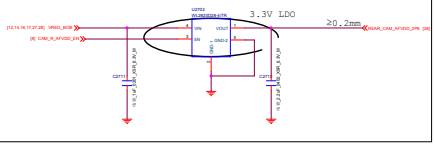

Rear Cam AVDD 2.8V

need use WL2820

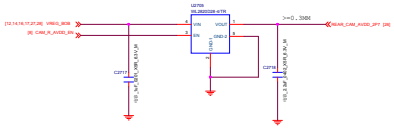

Front DVDD LDO 1.05V <=300mA

need use NCP134_1V05

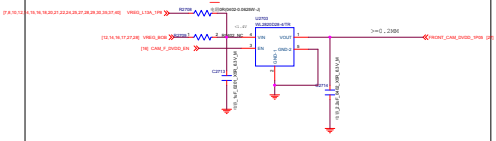

Front Cam AVDD 2.8V

need use WL2820 HQ11150309000

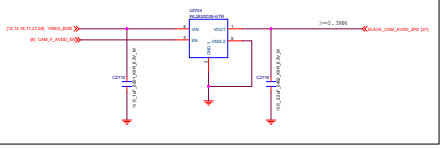

华勤通讯 Huaqin Telecom Technology Com.,Ltd			
Title	27.FRONT_CAM/CAM_POWER		
Size D	Project QL5018_MB_V1		Rev V1
Date: Thursday, April 05, 2018		Sheet 27 of 42	

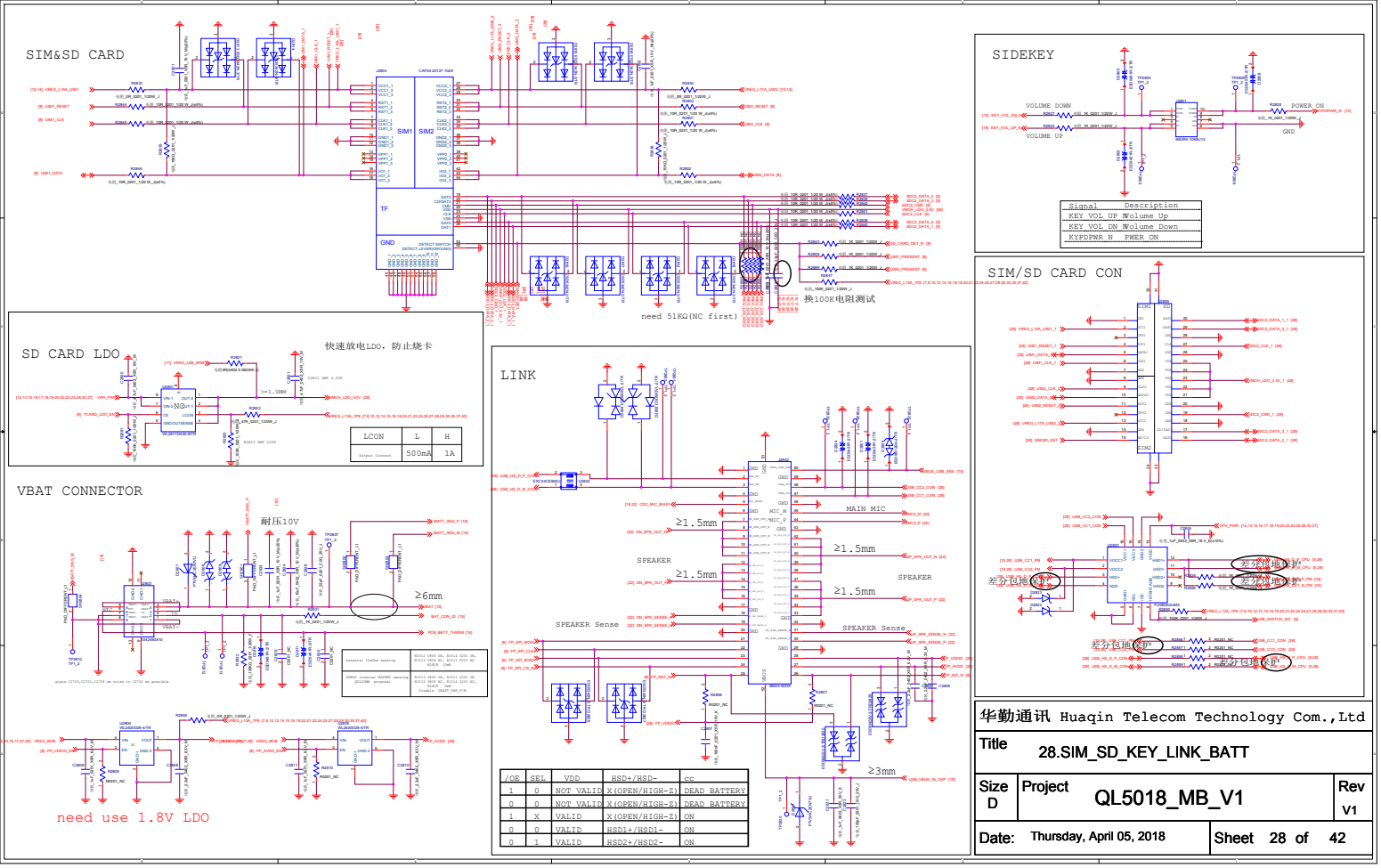
SIM&SD CARD
need 51KΩ(NC first)
换100K电阻测试
SD CARD LDO
快速放电LDO，防止烧卡
LCON L H
Output Current 500mA 1A
VBAT CONNECTOR
耐压10V
≥6mm
need use 1.8V LDO
LINK
≥1.5mm
SPEAKER
SPEAKER Sense
MAIN MIC
≥3mm
/OE SEL VDD HSD+/HSD- CC
1 0 NOT VALID X(OPEN/HIGH-Z) DEAD BATTERY
0 0 NOT VALID X(OPEN/HIGH-Z) DEAD BATTERY
1 X VALID X(OPEN/HIGH-Z) ON
0 0 VALID HSD1+/HSD1- ON
0 1 VALID HSD2+/HSD2- ON
SIDEKEY
VOLUME DOWN
VOLUME UP
POWER ON
GND
Signal Description
KEY_VOL_UP Volume Up
KEY_VOL_DN Volume Down
KYPDPWR_N PWER_ON
SIM/SD CARD CON
差分线地保护
华勤通讯 Huaqin Telecom Technology Com.,Ltd
Title 28.SIM_SD_KEY_LINK_BATT
Size D
Project QL5018_MB_V1
Rev V1
Date: Thursday, April 05, 2018
Sheet 28 of 42

PRIMARY_ANTENNA

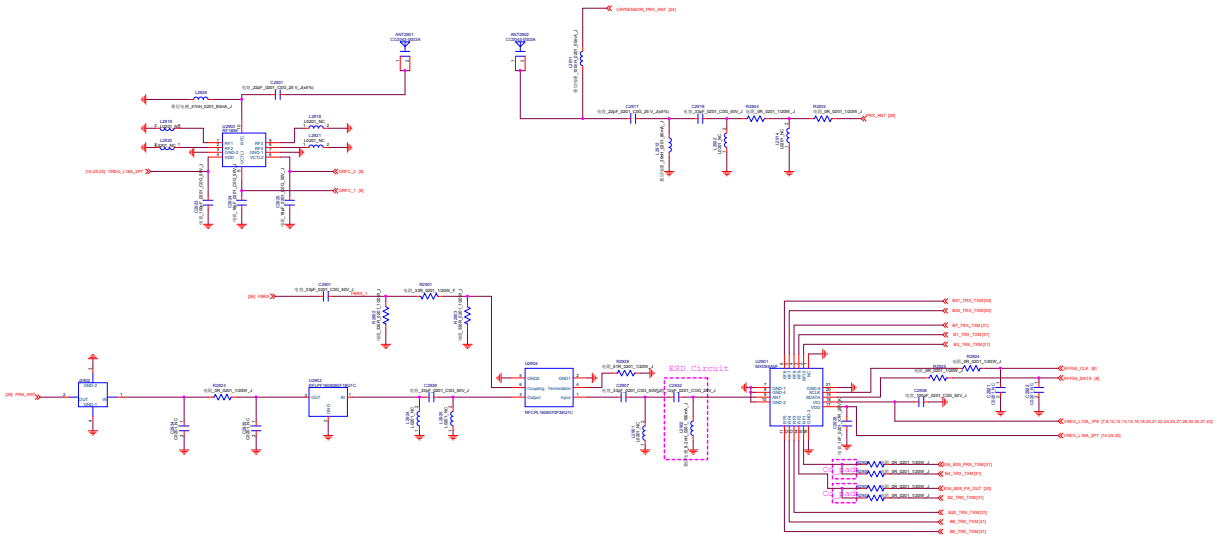

华勤通讯 Huaqin Telecom Technology Com.,Ltd		
Title	QL5018_MB_V1	
Size D	Project 29: PRIMARY_ANTENNA	Rev V1
Date: Thursday, April 05, 2018	Sheet 29 of 42	

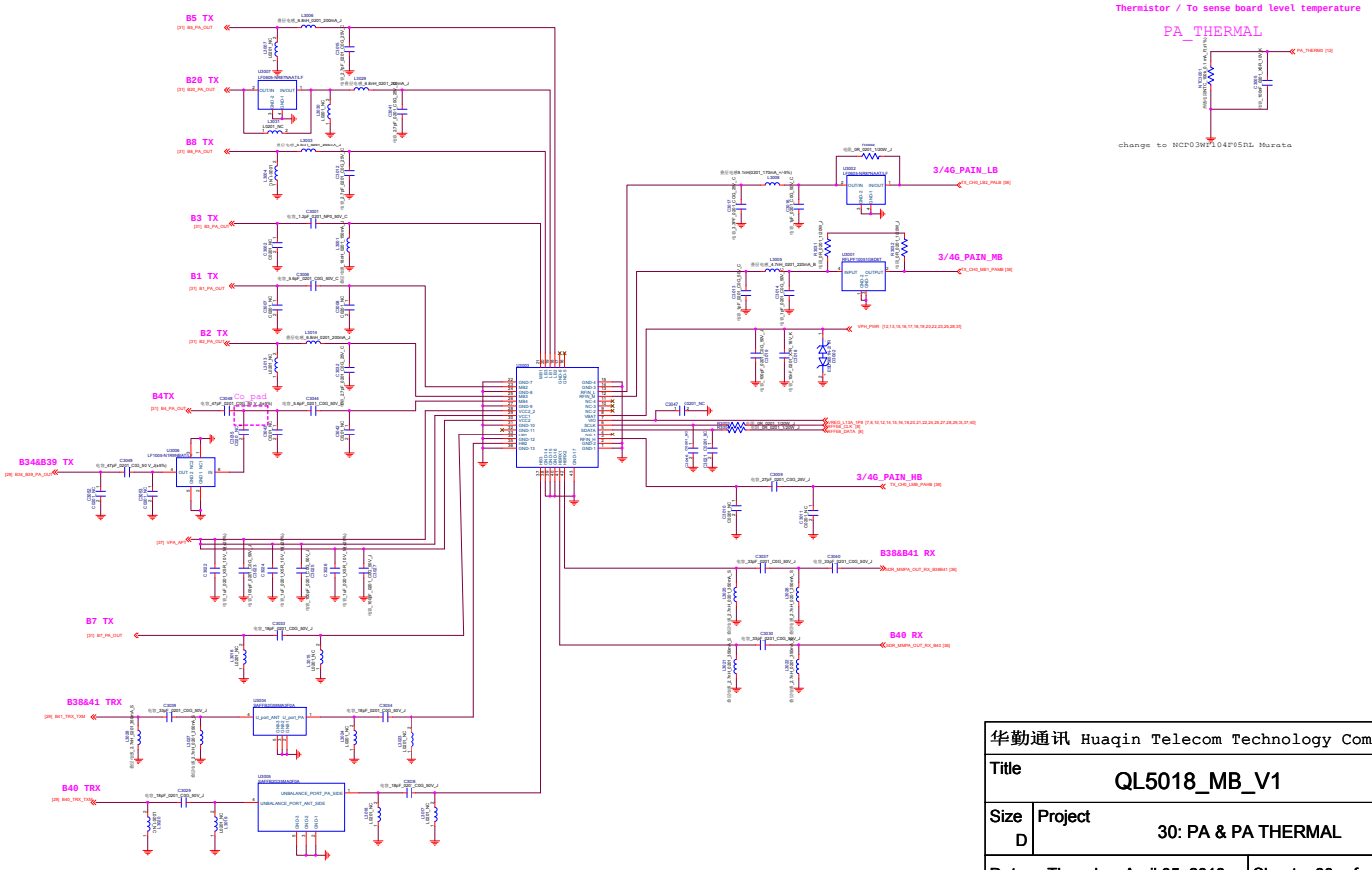

华勤通讯 Huaqin Telecom Technology Com.,Ltd		
Title	QL5018_MB_V1	
Size D	Project 30: PA & PA THERMAL	Rev V1
Date: Thursday, April 05, 2018	Sheet 30 of 42	

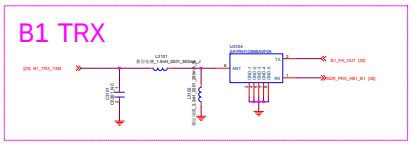

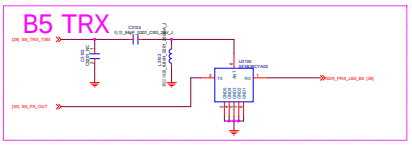

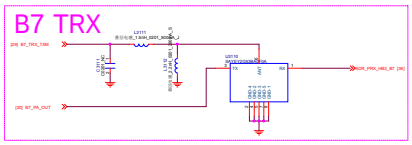

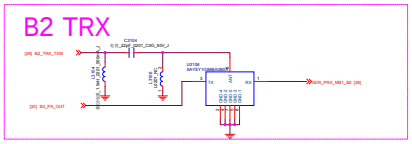

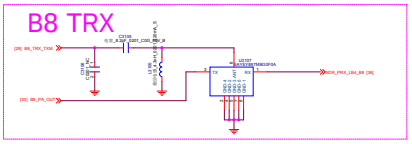

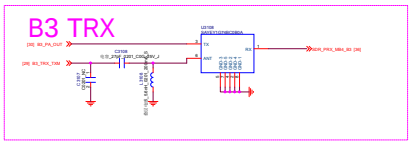

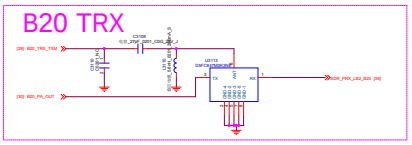

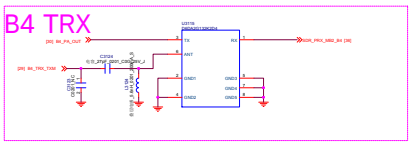

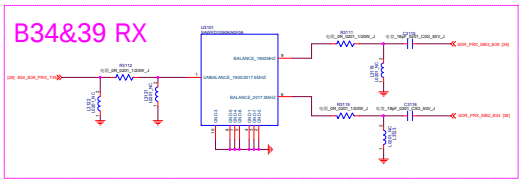

华勤通讯 Huaqin Telecom Technology Com.,Ltd		
Title QL5018_MB_V1		
Size D	Project 31: TRX_LMHB	Rev V1
Date: Thursday, April 05, 2018	Sheet 31 of 42	

DRX_ANT_HMLB

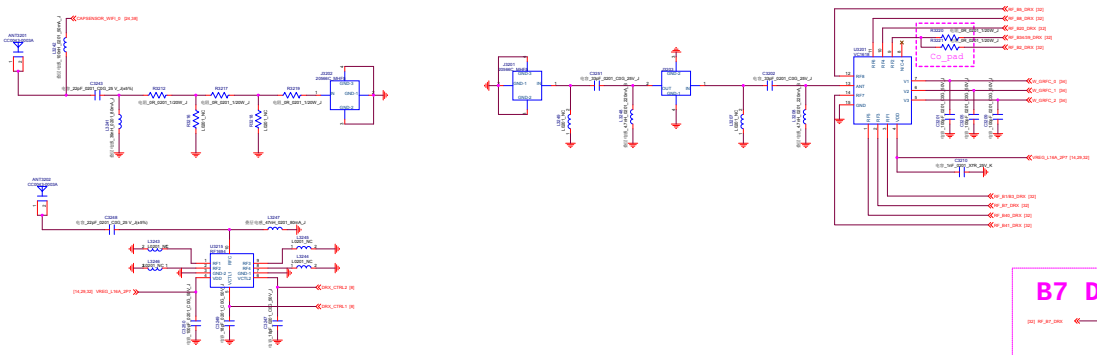

B1&B4/B3 DRX

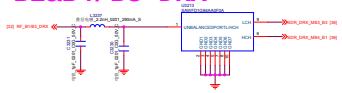

B5 DRX

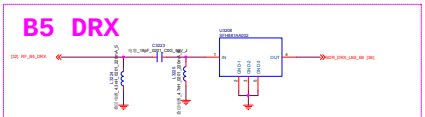

B7 DRX

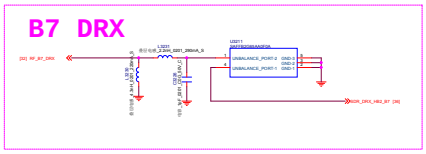

B2 DRX

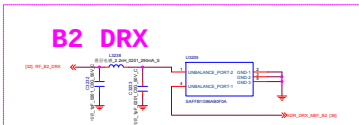

B8 DRX

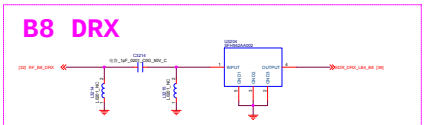

B40 DRX

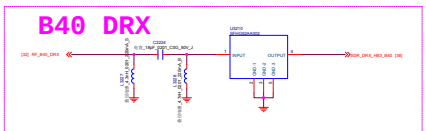

B20 DRX

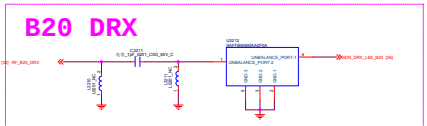

B38&41 DRX

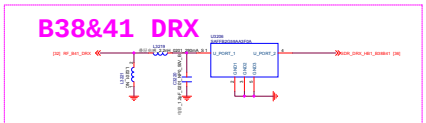

B34&39 RX

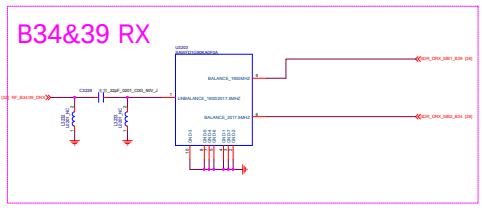

华勤通讯 Huaqin Telecom Technology Com.,Ltd		
Title	QL5018_MB_V1	
Size D	Project 32: DRX_LMHB	Rev V1
Date: Thursday, April 05, 2018	Sheet 32 of 42	

华勤通讯 Huaqin Telecom Technology Com.,Ltd		
Title QL5018_MB_V1		
Size D	Project 33: DIVERSITY_NULL	Rev V1
Date: Thursday, April 05, 2018	Sheet 33 of 42	

SDR660_MSS

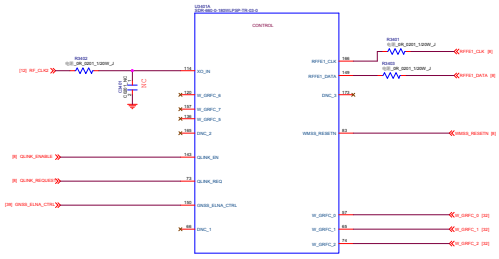

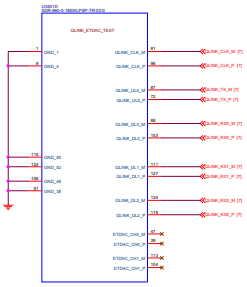

Each QLINK pair shall be routed in a channel together
isolated from other QLINK pairs with surrounding gnd

The differential reference impedance for the channel is recommended to be 85 ohm, +/- 10% variations due to manufacturing.

华勤通讯 Huaqin Telecom Technology Com.,Ltd		
Title	QL5018_MB_V1	
Size D	Project 34: SDR660_MSS	Rev V1
Date: Thursday, April 05, 2018	Sheet 34 of 42	

SDR660_PWR

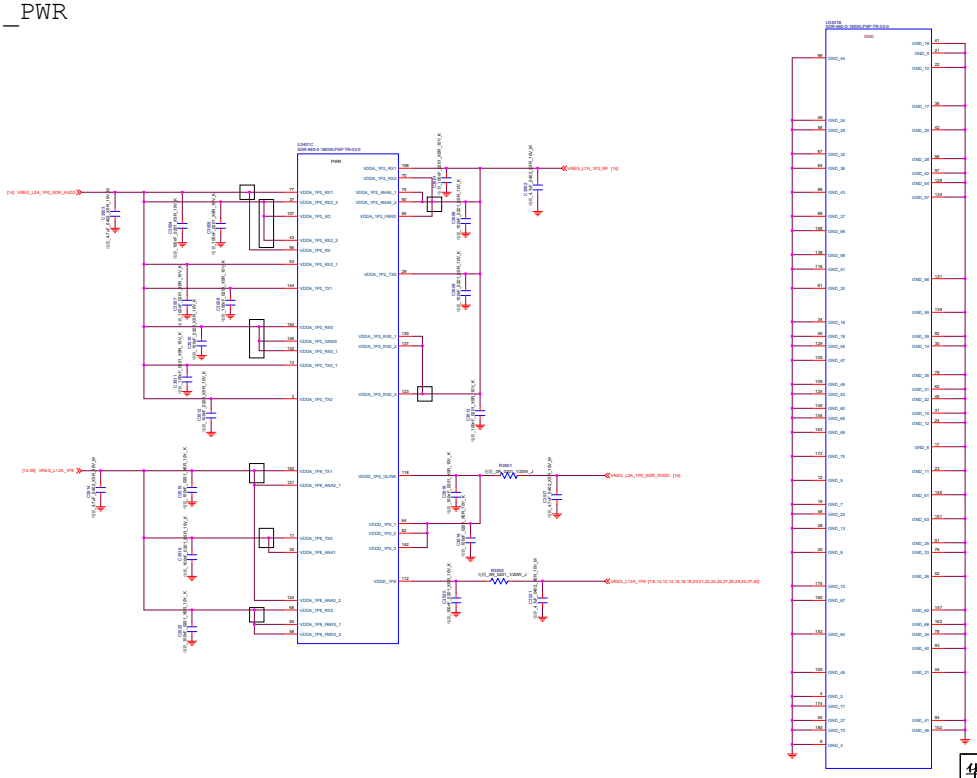

华勤通讯 Huaqin Telecom Technology Com.,Ltd		
Title	QL5018_MB_V1	
Size D	Project 35: SDR660_PWR	Rev V1
Date: Thursday, April 05, 2018	Sheet 35 of 42	

SDR660_DA/PRX/DRX/FBRX

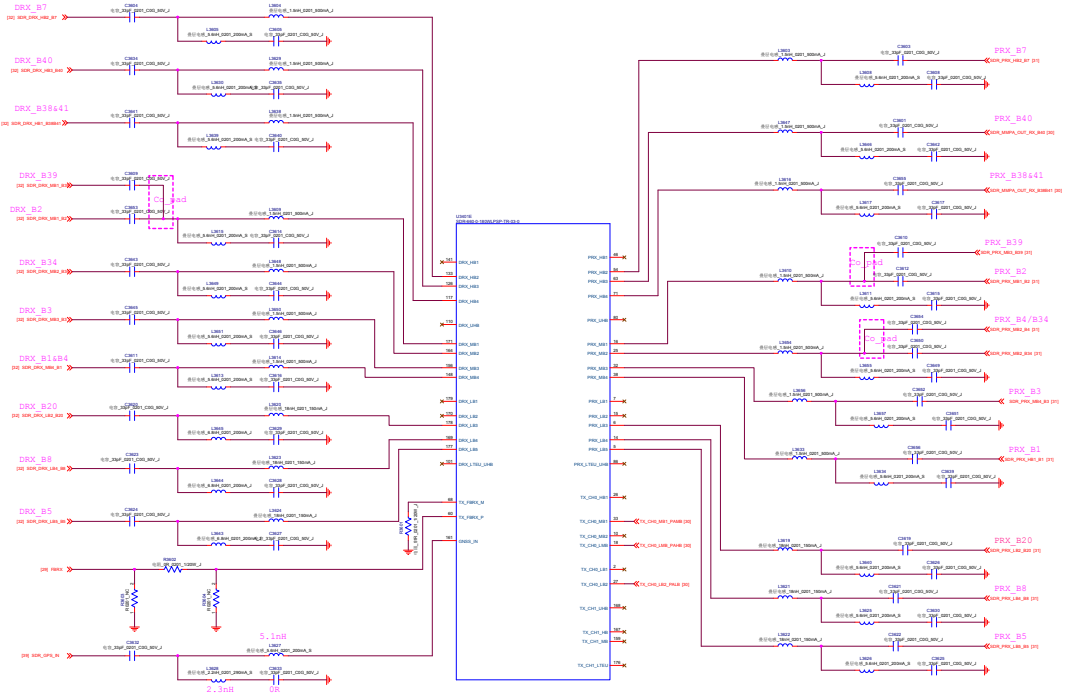

华勤通讯 Huaqin Telecom Technology Com.,Ltd		
Title	QL5018_MB_V1	
Size D	Project 36: SDR660_DA/PRX/DRX/FBRX	Rev V1
Date: Thursday, April 05, 2018	Sheet 36 of 42	

QET4101 & HPUE Boost

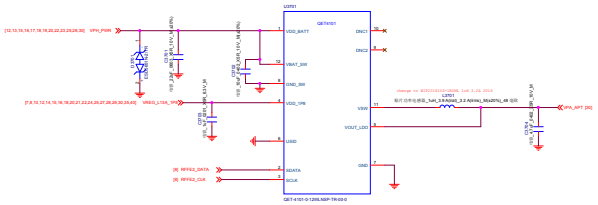

华勤通讯 Huaqin Telecom Technology Com.,Ltd		
Title	QL5018_MB_V1	
Size D	Project 37: QFE4101	Rev V1
Date: Thursday, April 05, 2018	Sheet 37 of 42	

WIFI 2.4G/5G/BT

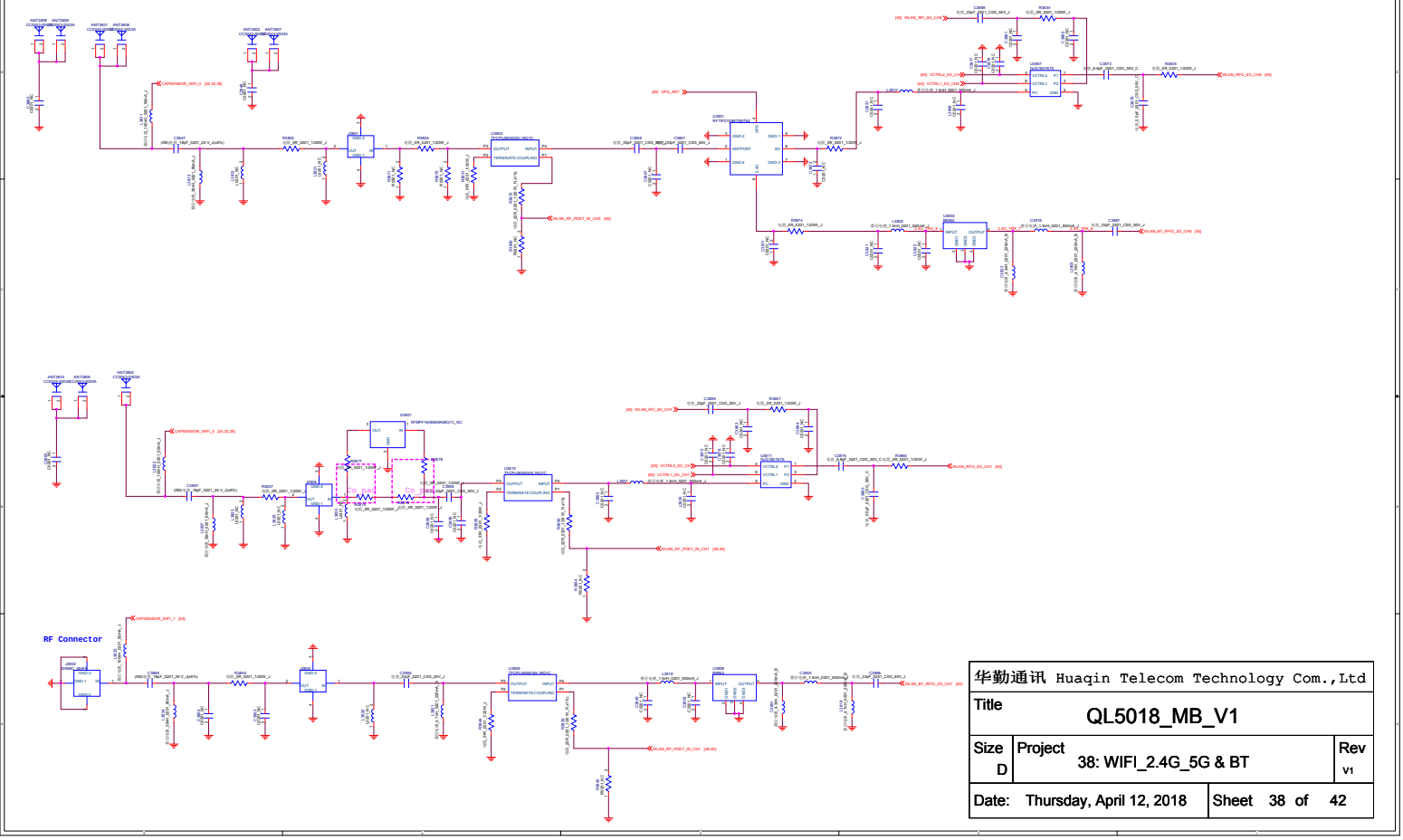

华勤通讯 Huaqin Telecom Technology Com.,Ltd		
Title	QL5018_MB_V1	
Size D	Project 38: WIFI_2.4G_5G & BT	Rev V1
Date: Thursday, April 12, 2018	Sheet 38 of 42	

GPS

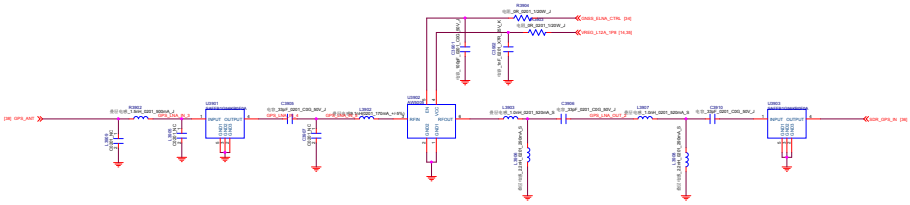

华勤通讯 Huaqin Telecom Technology Com.,Ltd		
Title	QL5018_MB_V1	
Size D	Project 39: GPS	Rev V1
Date: Thursday, April 05, 2018	Sheet 39 of 42	

WCN_3990

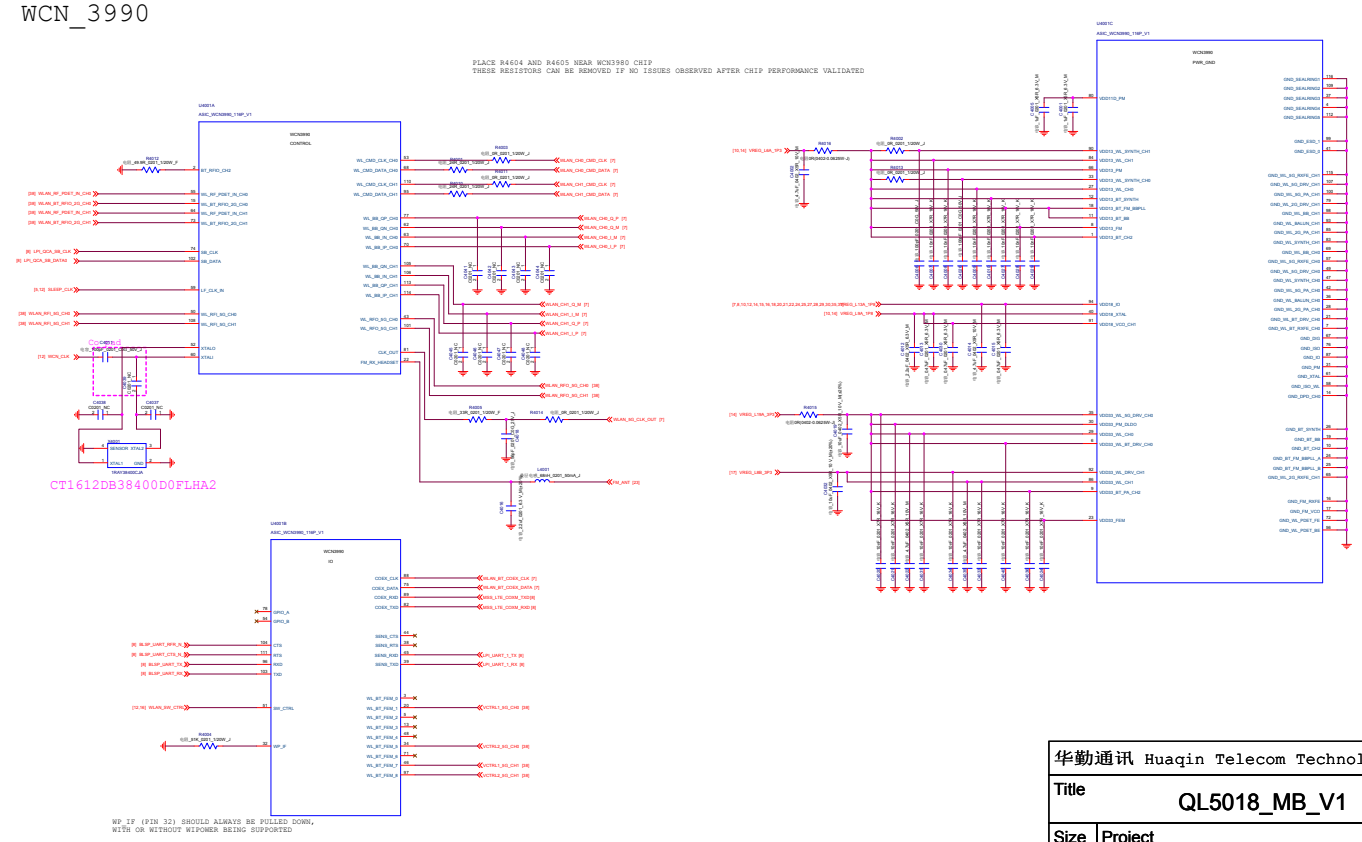

华勤通讯 Huaqin Telecom Technology Com.,Ltd		
Title QL5018_MB_V1		
Size D	Project 40: WCN3990	Rev V1
Date: Thursday, April 05, 2018	Sheet 40 of 42	

Date	Owner	Changer	Item
12/14	BB	TianKai	Delete VSP,VSN signal, signal pin NC
12/14	BB	TianKai	Add USB CC protection switch circuit
12/14	BB	TianKai	Add R509 on PON_RESET_N signal
12/27	BB	TianKai	Modify LCD bias circuiuts,NC pins haddle
12/27	BB	TianKai	Delete R1901,C1906,R1902,R1903,R1906,avoid shielding height
12/27	Stacking	Wangchuzhu	Change erajack to JAF00-05242-1510
12/27	BB	TianKai	Delete U2202 IIS testpoints for sufficient placement space on TOP
12/28	BB	Luzhouting	Ajust the lcm mipi,add the U2503 circuit for lcm,because of the voltage equal
12/28	BB	Luzhouting	Ajust the J2802,change the network PIN51 and PIN52,because of better performance
12/28	BB	TianKai	Exchange J2802 USB_HS_D_P_CON and USB_HS_D_M_CON signal, avoid cross routing
12/29	BB	TianKai	QTI recommends NC K24,H26,AP26,AK26 as UFS and USB ss is not used
12/29	BB	TianKai	QTI delete C1904recommends NC K24,H26,AP26,AK26 as UFS and USB ss is not used
12/29	BB	customer	U2203 change to AM0502B-NE381-X01
12/29	BB	customer	D2607 change to 19-217UTD/S3393/TR8(UN)
01/02	BB	TianKai	Add C2269,C2270 10uF capacitor
01/02	BB	TianKai	Change D2301,D2302,D2303 to PESDTC5VB
01/03	BB	TianKai	Delete C1904
01/03	BB	TianKai	Add R2862,R2863,R2612
01/04	BB	TianKai	Add C2271,C2272
01/04	BB	TianKai	DN_SPK_RST:GPIO_70->GPIO_113,UP_SPK_RST:GPIO_73->GPIO_48,TCARD_LDO_EN:GPIO_64->GPIO_59
01/05	BB	Luzhouting	Modify LCD pin definition,NC 24,connect 21
01/08	BB	tianaki	Add R2222,R2536,R2537,R2107,R2223,U2504 conversion circuit
01/09	BB	tianaki	C3232 change to CM3232EA3OG-H2, U2502 TLV70733DQNR change to AP7365-XXSNG-7
01/09	BB	tianaki	UP SPK DOUT connect to IIS2,DN SPK DOUT connect to IIS1 for batter AEC performance
01/11	BB	tianaki	D2821,D1501 change footprint, delete D2820,add R2541
01/13	BB	tianaki	Add C944,C945
01/13	BB	tianaki	Add R1906
01/15	BB	tianaki	LCD_RST_N(GPIO_53) change to GPIO_62
01/15	BB	tianaki	Add C701,C1523,C1607,C2833, delete Flash_Strobe signal
01/16	BB	tianaki	Add C1725,R1907,B2306,C1503,D1533,D1534,D2825 for better performance
01/16	BB	tianaki	Delete R2860,R2861
01/16	BB	Luzhouting	Modified headset switch circuit
01/17	BB	tiankai	Delete C502,C503 for layout
01/18	BB	tiankai	D2807,D2821,Q2101 TVS change footprint
01/18	BB	tiankai	RGB_INT_L change to GPIO_41 for GPIO_95 have no interrupt function
01/19	BB	tiankai	J2802.7 change DN_SPK_OUT_N to GND
01/20	BB	tiankai	swap C1301 and C1307 to meet layout requtiement
V2			
02/12	BB	tiankai	MI2S_1_WS signal adds TP2207 testpoint
02/12	BB	tiankai	U2802,Z2503,Z2501,Z2502,Z2504,Z2505,Z2602,Z2604,Z2608,Z2606,Z2610,Z2703,Z2705,Z2704 change to EXCX4CE900U
02/12	BB	tiankai	D2205,D2803,D2805,D2806,D2810,D2811,D2510 footprint chang to ESD5451R-2/TR
02/12	BB	tiankai	D2301,D2302,D2303,D2304 footprint change to ESD5651N-2/TR
02/12	BB	tiankai	BOARD_ID change to PM660 GPIO_2
02/12	BB	tiankai	BACK_CAM_ID0 change to PM660 GPIO_11
02/26	BB	tiankai	Delete R2862 and R2863 to solve the footprint uncompatible problem
02/26	BB	tiankai	Change C2403's footprint from 0603 to 0402 to avoid shorting to GND
02/26	BB	tiankai	Change C2215,C2216,C2228,C2235's footprint from 0805 to 0603 to avoid shorting to GND
02/26	BB	tiankai	Delete ANT2115 for not used
V3			
03/05	BB	Liyuehua	ADD GPIO_63 FP_RST_N;GPIO_70 FP_VDDIO_EN;GPIO_71 FP_INT_N;GPIO_74 FP_AVDD_EN;LPI_GPIO8-11 FP SPI
03/05	BB	Liyuehua	Change the link BTB singal and add FP singal;,ADD U2804,U2805 circuit
03/05	BB	Liyuehua	ADD D2806
03/08	BB	Lizhenhua	Change GPIO_92 FP_RST_N;GPIO_108 FP_VDDIO_EN;GPIO_71 FP_INT_N;GPIO_98 FP_AVDD_EN to good routin. GPIO24~27 FP SPI
03/08	BB	Lizhenhua	COMPATIBLE IIS WITH TDM. R2222 /R2223
03/08	BB	Lizhenhua	Delete ANT2201~ANT2204
03/08	BB	Lizhenhua	Add R2865 instead of U2804 LDO
03/08	BB	Lizhenhua	Delete D2608
03/09	BB	Lizhenhua	C2018 and C2019's footprint change from 0603 to 0402 to avoid shorting to GND
03/09	BB	Lizhenhua	Change GPIO_108 FP_RST_N;GPIO_92 FP_VDDIO_EN;

华勤通讯 Huaqin Telecom Technology Com.,Ltd		
Title	QL5018_MB_V1	
Size Custom	Project 41.Changelist	Rev V1
Date: Thursday, April 05, 2018	Sheet 41 of 42	

Date	Owner	Changer	Item
V4			
2018/3/28	BB	Wanghongjian	Delete R2316 for Crosstalk
2018/3/28	BB	Wanghongjian	Change ANT2101--ANT2114 AND ANT2116-ANT2119 Footprint
2018/3/28	BB	Wanghongjian	Delete R2829
2018/3/28	BB	Wanghongjian	Add R2545

华勤通讯 Huaqin Telecom Technology Com.,Ltd		
Title	QL5018_MB_V1	
Size Custom	Project 42.Changelist	Rev V1
Date: Thursday, April 05, 2018	Sheet 41 of 42	

Date	Owner	Changer	Item
12/28	RF	Penglu	Add J3201 and J3202
12/28	RF	Penglu	Change DRX ports
01/01	RF	Penglu	Change MMPA B1 and B3 ports
01/02	RF	Penglu	Optimization of U3807 and U3811 matching
01/03	RF	Penglu	Change PRX(Page36) B1/3/39 and DRX B1/3/39 ports
01/03	RF	Penglu	Optimization of PRX(Page29),DRX(Page32) and WCN(Page38) ANT matching
01/04	RF	Penglu	Add GND spring ANT2114,ANT2113,ANT2117,ANT2118,ANT2115,ANT2116,ANT2119,
01/08	RF	Penglu	Change the WLAN_RFI_5G_CH1 Net(Page38)
01/11	RF	Penglu	Change X1201 package
01/16	RF	Penglu	Change U3006 and U2901 package
01/17	RF	Penglu	Change X4001 package
01/17	RF	Penglu	Change C2022 C3024 C3026 package 0402 to 0201;Change C2908 10pF to 100pF
01/18	RF	Fankai	Add L3909 R3873 R3874
01/18	RF	HuangZhihong	Delet 2.4G &5G duplexer
02/12	RF	Penglu	Add DRX_CTRL1(GPIO97) and DRX_CTRL2(GPIO95);Add C3886 C3887 C3888 C3889 ;Change U2904 pin1 and pin3
02/24	RF	Penglu	Add R3903 R3904
02/26	RF	Penglu	Delet L3828 L3829 R3851 L3835 L3816 L3814 R3836
03/08	RF	HuangZhihong	SAR moving forward near Antenna PAD Delet L2916 L2915 C2926 C2919 C3241 C3245 C3246 C3239 C3244 DeletL3817 C3845 C3801 L3824 C3860 C3861
03/30	RF	HuangZhihong	add C4040
04/05	RF	penglu	add C4041、C4042、C4043、C4044、C4045、C4046、C4047、C4048、R4015、R4016
04/12	RF	gukedong	add 5G wifi CH1 filter S3801,and R3875、R3876、R3877、R3878
04/12	RF	gukedong	add L3835

华勤通讯 Huaqin Telecom Technology Com.,Ltd		
Title QL5018_MB_V1		
Size D	Project 42.Changelist	Rev V1
Date: Thursday, April 12, 2018	Sheet 42 of 42	